ORDINANCE NO._____

AN ORDINANCE AMENDING TITLE 19 OF THE SAN LUIS OBISPO COUNTY CODE BY ADOPTING AND AMENDING THE 2013 CALIFORNIA BUILDING STANDARDS CODE, INCLUDING ANNUAL SUPPLEMENTS AND STATE AMENDMENTS AND ERRATA

WHEREAS, it is the desire and intent of the Board of Supervisors of San Luis Obispo County to protect and promote the public health, safety and welfare of the citizens of the County; and

WHEREAS, the State Building Standards Commission has approved and published the 2013 edition of the California Building Standards Code, California Code of Regulations, Title 24, on July 1, 2013 and such code becomes effective on January 1, 2014; and

WHEREAS, Health and Safety Code Section 18939 provides that the triennial edition of the California Building Code establishes building standards for all occupancies throughout the State and requires that these standards incorporate the latest editions of the Technical Codes with necessary California amendments; and

WHEREAS, the Building and Construction Ordinance, Title 19 of the San Luis Obispo County Code, was adopted with the intent to regulate the design and construction of buildings and structures through basic standards for site preparation, construction activities, quality of materials, occupancy classifications, the location of buildings and structures and building systems associated with buildings and structures; and

WHEREAS, Health and Safety Code Sections 17958.7 and 18941.5 provide that the County may make changes or modifications to the building standards contained in the California Building Code based on express findings that such changes or modifications are reasonably necessary because of local climatic, geological or topographical conditions; and

WHEREAS, the California Building Code, California Code of Regulations, Title 24, which incorporates the California Building Standards Administrative Code, the California Building Code, the California Residential Code, the California Electrical Code, the California Mechanical Code, the California Plumbing code, the California Energy Code, the State Historical Building

Code, the California Fire Code, the California Existing Building Code, the California Green Buildings Standards Code, and the California Reference Standards Code, is adopted every three years by order of the California Legislature with supplements published in intervening years; and

WHEREAS, the Ordinance will amend Title 19 of the San Luis Obispo County Code so that it adopts and amends the 2013 California Building Standards Code as modified and amended, including annual supplements and state amendments and errata; and

WHEREAS, at its November 26, 2013 meeting the Board of Supervisors of San Luis Obispo County adopted findings as required by California Health and Safety Code Sections 17958.7 and 18941.5 that because of climatic, geographical and topographical conditions that exist within San Luis Obispo County, the amendments to the adopted codes are necessary to protect citizens' life, health, the community environment and property; and

WHEREAS, based upon the findings contained in the Resolution adopted at its November 26, 2013 meeting, the Board of Supervisors has found that certain additional modifications and additions to the California Building Standards Code are reasonably necessary based upon local climatic, topographical and geological conditions.

NOW, THEREFORE, the Board of Supervisors of the County of San Luis Obispo ordains as follows:

SECTION 1: Chapters 19.01, 19.02, 19.03, , 19.07, 19.08 and 19.90 of Title 19 of the San Luis Obispo County Code are hereby repealed and replaced by new Chapters 19.01, 19.02, 19.03, , 19.07, 19.08 and 19.90, as follows.

NOTE: FOR EASE OF REFERENCE AND CONVENIENCE OF THE CLERK, ONLY THOSE CHAPTERS OF TITLE 19 THAT ARE BEING AMENDED, ADDED OR DELETED ARE INCLUDED BELOW. ALL OTHER CHAPTERS OF TITLE 19 SHALL REMAIN UNCHANGED.

19.01.010 - Title and Purpose. This title shall be known and may be cited as "The Building and Construction Ordinance of the County of San Luis Obispo", Title 19 of the San Luis Obispo County Code. These regulations are hereby established and adopted to protect and promote the public health, safety and welfare. The intent of this ordinance is to regulate the design and construction of buildings and structures through basic standards for site preparation, erosion and sedimentation control, construction activities, quality of materials, occupancy classifications, the location and maintenance of buildings and structures and certain equipment associated with

buildings and structures. This title prescribes regulations and standards that are consistent with the State Housing Law of California.

19.01.020 - Scope and Applicability. The provisions of this title apply to all or any part of buildings, structures and building service equipment constructed, altered, moved, occupied, used, designed or intended to be used within the unincorporated areas of San Luis Obispo County, except as otherwise provided by this title, state or federal law.

19.01.030 - Administration. This title shall be administered by the building official of San Luis Obispo County.

1. **Building Official Designated.** The Chief Building Official is hereby designated as the building official and code official for the County of San Luis Obispo. Where the "authority having jurisdiction" is used in the adopted codes, it shall mean the building official. The building official hereby designates the director of the County General Services Agency as a deputy building official and code official for County-owned buildings.

2. **Duties.** The duties of the building official under this title include but are not limited to the enforcement of the provisions of this title and work with other designated officers in the enforcement of applicable provisions of the Land Use Ordinance, pursuant to the provisions of Chapters 22.10 or 23.10 of this code and California State Law. The building official is designated as the county enforcement officer referred to in the California Health and Safety Code.

19.01.040 - Adoption of Codes. . Twelve documents, one each of which are on file in County offices, identified by the Seal of the County of San Luis Obispo, marked and designated as the 2013 California Code of Regulations - California Building Standards Code Title 24 :

Part 1: the California Building Standards Administrative Code;
Part 2: Volume 1 and 2, named the California Building Code and is based on the 2012 International Building Code;
Part 2.5: the California Residential Code and is based on the 2012 International Residential Code;
Part 3: the California Electrical Code and is based on the 2011 National Electrical Code;
Part 4: the California Mechanical Code and is based on the 2012 Uniform Mechanical Code;
Part 5: the California Plumbing Code and is based on the 2012 Uniform Plumbing Code;
Part 6: the California Energy Code;
Part 7: currently vacant;
Part 8: the State Historical Building Code;
Part 9: the California Fire Code and is based on the 2012 International Fire Code;
Part 10: the California Existing Building Code and is based the 2012 International Existing Building Code;
Part 11: the California Green Building Standards Code, and is also called the CALGreen Code;

Part 12: the California Reference Standards Code. 2012 Uniform Solar Energy Code, and the 2012 Uniform Swimming Pool, Spa and Hot Tub Code published by the International Association of Plumbing and Mechanical Officials, 2012 edition of International Property Maintenance Code published by the International Code Council are hereby adopted, including chapters and sections not adopted by agencies of the State of California, and including appendices thereto, as the Building Construction Regulations of the County of San Luis Obispo. The provisions of such are hereby referred to, adopted, and made a part hereof as if fully set out in this Chapter except as modified hereinafter.

19.01.050 - Definitions. Whenever names, terms, abbreviations, phrases and their derivatives are defined elsewhere in this code and are not defined in this section, those definitions shall apply to this title. All definitions contained in the codes adopted in this title, the California Health and Safety Code and the California Administrative Code shall apply throughout this title except as defined by this section.

a. **Administrative Authority** means the building official.

3. **Accessory Building** means a building or structure the use of which is incidental to that of the main building, and which is located on the same lot.

4. **Board of Supervisors** means the Board of Supervisors of the County of San Luis Obispo.

5. **Building Division** means the Building Division of the Department of Planning and Building of the County of San Luis Obispo.

6. **Building Official** means the Chief Building Official (DIV MGR-BUILDING) of the County of San Luis Obispo or his/her duly designated deputy

7. **Coastal Zone** means lands identified on the official maps (Part III) of the Land Use Element of the San Luis Obispo County General Plan as being located within the Local Coastal Plan (LCP) combining designation, the portions of the California Coastal Zone within San Luis Obispo County established by the California Coastal Act of 1976.

8. **Code Enforcement Agency**, as well as enforcement agency and enforcing agency, means the San Luis Obispo County Department of Planning and Building.

9. **Condition Compliance Monitoring**, refers to a case type for the purpose of monitoring planning conditions and erosion/sedimentation control Best Management Practices after a Construction Permit is finaled.

10. **Construction Permit** means an issued building, plumbing, electrical, mechanical or grading permit as required by this title, Title 22 or Title 23 of this code.

11. **Construction Permit Application** means a building, plumbing, electrical, mechanical or grading application as required by this title, Title 22 or Title 23 of this code.

12. **County Clerk** means the County Clerk of the County of San Luis Obispo.

13. **Covered Sidewalk** means a permanent covering attached to a building and projecting from the property line toward the curb line, over a public sidewalk or public walkway.

14. **Director of Public Works** means the County Engineer of San Luis Obispo County.

15. **Health Department** means the Environmental Health Division of the San Luis Obispo County Health Agency.

16. **Land Use Ordinance** means, for the purposes of this title only, either the San Luis Obispo County Land Use Ordinance, Title 22 of this code or, where applicable, the Coastal Zone Land Use Ordinance, Title 23 of this code.

17. **Legislative Body** means the Board of Supervisors of the County of San Luis Obispo.

18. **Planning Department** means the Department of Planning and Building of the County of San Luis Obispo.

19. **Planning Director** means the director of the Department of Planning and Building of the County of San Luis Obispo.

20. **Urban Area** is any area within the urban or village reserve lines established by the Land Use Element of the San Luis Obispo County General Plan.

21. **Zoning Ordinance** means the San Luis Obispo County Land Use Ordinance, Title 22 of this code, or where applicable, the Coastal Zone Land Use Ordinance, Title 23 of this code.

19.02.010 - Applicability of Chapter. The purpose of this chapter is to establish the administrative rules and procedures for regulating construction activities within the unincorporated areas of the county by modifications of Chapter 1-Division II of the California Building Code (CBC) and California Residential Code (CRC) as adopted in Section 19.01.040 of this code. Unless amended or deleted by this chapter all CBC and CRC administrative portions remain in effect .

19.02.020 - Modifications of Chapter 1 Division II of the CBC and CRC.

a. Amend DIVISION II, SCOPE AND ADMINISTRATION Section 103.1 to read as follows:

103.1 Creation of enforcement agency. The Building Division of the Department of Planning and Building is hereby created and the official in charge thereof shall be known as the chief building official.

b. Amend ADMINISTRATION Section 105 PERMITS to read as follows:

105.1 Required. Any owner or authorized agent who intends to construct, enlarge, alter, repair, move, demolish, or change the occupancy of a building or structure, or to erect, install, enlarge, alter, repair, remove, convert or replace any electrical, gas, mechanical or plumbing system, the installation of which is regulated by this code, or to cause any such work to be done, shall first make application to the building official and obtain the required permit.

105.1.1 Annual permit. In lieu of an individual permit for each alteration to an already approved electrical, gas, mechanical or plumbing installation, the building official is authorized to issue an annual permit upon application therefore to any person, firm or corporation regularly employing one or more qualified trade persons in the building, structure or on the premises owned or operated by the applicant for the permit.

105.1.2 Annual Permit Records. The person to whom an annual permit is issued shall keep a detailed record of alterations made under such annual permit. The building official shall have access to such records at all times or such records shall be filed with the building official as designated. A fee specified in the County Fee Schedule shall be paid for each annual permit at the time such permit is issued. In addition, real time billing plan check and inspection fees shall be paid for all work installed under such a permit, at the time the work is inspected.

105.2 Work exempt from permit. Exemptions from permit requirements of this code shall not be deemed to grant authorization for any work to be done in any manner in violation of the provisions of this code or any other laws or ordinances of this jurisdiction.

Permits shall not be required for the following:

Building:

1. One story detached residential accessory structures used as tool and storage sheds, playhouses and similar uses, provided the floor area does not exceed 120 square feet. (11m2)

2. Open wire fences not over 8” feet high in the Agriculture or Rural Lands land use categories, and solid fences not exceeding 6'-6" in height in all land use categories..

3. Oil derricks

4. Retaining walls that are not over 4 feet (1219 mm) in height measured from the bottom of the footing to the top of the wall, unless supporting a surcharge, impounding Class I, II, IIIA liquids, or located within 3 feet of a property line and retaining soil more than 2 feet in height.

5. Water tanks supported directly on grade if the capacity does not exceed 5000 gallons (18925 L) and the ratio of height to diameter or width does not exceed 1:2. (Water tanks in High or Very High fire zones shall be galvanized steel. Daisy chaining of 5000 tanks are not allowed for fire sprinkler water storage)

6. Sidewalks and driveways not more than 30 inches (762) above adjacent grade (unless subject to permit by #4 above), and not over any basement or story below and area not part of an exit/accessible route.

7. Painting, papering, tiling, carpeting, cabinets, counter tops and similar finish work.

8. Temporary motion picture, television and theater stage sets and scenery.

9. Prefabricated swimming pools accessory to a Group R-3 occupancy that are less than 24” deep, do not exceed 5,000 gallons (18925)L and are installed entirely above ground.

10. Hoop shade cloth structures constructed for nursery or agricultural purposes, not including plumbing, electrical or mechanical systems.

11. Readily removable plastic covered metal hoop structures without in ground footings or with foundations that are not more than 12” in height and less than or equal to 400 sq. ft.

12. Swings and other playground equipment accessory to detached one and two-family dwellings.

13. Window awnings supported by an exterior wall that do not project more than 54 inches (1372mm) from the exterior wall and do not require additional support of Group R-3 and U occupancies.

14. Nonfixed and movable fixture, cases racks, counters and partitions not over 5 feet 9 inches (1753) in height.

15. Decks not exceeding 200 square feet (18.58m2) in area, that are not more than 30 inches (762 mm) above grade at any point, are not attached to a dwelling and do not serve the exit door required by Section R311.4.

16. Replacement residential windows that do not remove the frame of the window, meet the current energy code min U-value and the current code requirements for safety glazing in hazardous locations per CRC R308. If the house was built per WUI codes(2008) then the replacement windows must meet WUI requirements (one pane tempered).

17. Replacement asphalt single roofs where all the old roofing is removed and Class A asphalt single meeting CEC Cool Roof requirements are installed.

18. Detached one story shade covers for animals when the covers are not over 12 feet in height above grade and not more than 1,000 square feet of roof area. Two wall maximum allowed.

19. AG-EXEMPT STRUCTURE - Agricultural accessory buildings that meet all of the following criteria:

    . AGRICULTURAL, BUILDING. A structure designed and constructed to house farm implements, hay, grain, poultry, livestock or other horticultural products. This structure shall not be a place of human habitation or a place of employment where agricultural products are processed, treated or packaged, nor shall it be a place used by the public.

    a. Within an Agriculture or Rural Lands land use category, the building is located outside of urban or village reserve lines as delineated by Titles 22 or 23 of the San Luis Obispo County Code;

b. The property size is 20 acres or more;

c. The building is located in excess of 100 feet from any adjacent property or public road;

d. The building is located 50 feet from other structures including other ag-exempt structures.

e. The floor area does not exceed 3,000 square feet and building height does not exceed one story including storage loft/mezzanine (1/3 of the ground floor area) open to floor below;

f. There is an apparent existing agricultural use of the property; and

g. The building is not located within an Airport Review, Flood Hazard or Sensitive Resource Area combining designation as defined in the Land Use Element of the San Luis Obispo County General Plan.

h. No electrical, plumbing or mechanical is allowed except under separate permit.

20. Temporary buildings or structures used in connection with fairs, carnivals, celebrations and similar affairs not to exceed 30 days duration; except grandstands, platforms, or scaffolds over 30 inches in greatest height designed or intended for occupancy by more than two persons.

Electrical:

1. Repair and maintenance: Minor repair work, including the replacement of lamps or the connection of approved portable electrical equipment to approved permanently installed receptacles.

2. Radio and television transmitting stations: The provisions of this code shall not apply to electrical equipment used for radio and television transmissions, but do apply to equipment and wiring for a power supply and the installation of towers and antennas.

3. Temporary testing systems: A permit shall not be required for the installation of any temporary system required for the testing or servicing of electrical equipment or apparatus.

4. Listed cord-and-plug connected temporary decorative lighting.

5. Reinstallation of attachment plug receptacles but not the outlets therefore.

6. Replacement of branch circuit overcurrent devices of the required capacity in the same location.

7. Electrical wiring, devices, appliances, apparatus or equipment operating at less than 25 volts and not capable of supplying more than 50 watts of energy.

Gas:

1. Portable heating appliance.

2. Replacement of any minor part that does not alter approval of equipment unsafe.

3. Portable-fuel-cell appliances that are not connected to a fixed piping system and are not interconnected to a power grid.

Mechanical:

1. Portable heating appliance

2. Portable ventilation equipment.

3. Portable cooling unit.

4. Steam, hot or chilled water piping within any heating or cooling equipment regulated by this code.

5. Replacement of any part that does not alter its approval or make it unsafe.

6. Portable evaporative cooler.

7. Self-contained refrigeration system containing 10 pounds (5kg) or less of refrigerant and actuated by motors of 1 horsepower (746 W) or less.

Plumbing:

1. The stopping of leaks in drains, water, soil, waste or vent pipe, provided, however, that if any concealed trap, drain pipe, water, soil, waste or vent pipe becomes defective and it becomes necessary to remove and replace the same with the new material, such work shall be considered as new work and a permit shall be obtained and inspection made as provided in this code.

2. The clearing of stoppages or the repairing of leaks in pipes, valves or fixtures and the removal and reinstallation of water closets, provided such repairs do not involve or require the replacement or rearrangement of valves, pipes, or fixtures.

Section 105.2.1 Emergency repairs. Where equipment replacements and repairs must be performed in an emergency situation, the *permit* application shall be submitted within the next working business day to the *building official.*

105.2.2 Repairs. Application or notice to the *building official* is not required for ordinary repairs to structures, replacement of lamps or the connection of *approved* portable electrical equipment to *approved* permanently installed receptacles. Such repairs shall not include the cutting away of any wall, partition or portion thereof, the removal or cutting of any structural beam or load-bearing support, or the removal or change of any

required *means of egress,* or rearrangement of parts of a structure affecting the egress requirements; nor shall ordinary repairs include *addition to, alteration* of, replacement or relocation of any standpipe, water supply, sewer, drainage, drain leader, gas, soil, waste, vent or similar piping, electric wiring or mechanical or other work affecting public health or general safety.

105.2.3 Public service agencies. A *permit* shall not be required for the installation, *alteration* or repair of generation, transmission, distribution or metering or other related equipment that is under the ownership and control of public service agencies by established right.

105.3 Application for Permit. To obtain a permit, the applicant shall first file an application therefor in writing on a form furnished by the department of building safety for that purpose. Such application shall:

1. Identify and describe the work to be covered by the permit for which application is made.

2. Describe the land on which the proposed work is to be done by legal description, street address or similar description that will readily identify and definitely locate the proposed building or work. Provide legible vicinity map.

3. Indicate the use and occupancy for which the proposed work is intended.

4. Show all structures on the lot and their associated construction permit numbers.

5. Be accompanied by construction documents and other information as required in Section CRC-R106 or CBC-107.

6. State the valuation of the proposed work. It shall include total value of the work for which a permit is being issued, such as electrical, gas, mechanical, plumbing equipment and other permanent systems, including materials and labor.

7. Be signed by the applicant, or the applicant's authorized agent with proof of ownership. Agents shall present evidence that they are authorized to act as agent for the owner. Tenants submitting construction permit application as owner builder shall submit proof that the landowner concurs with the improvements.

8. Give such other data and information as required by the building official.

9. Provide water supply information. Prior to intake, building permit applications shall include verification of an available potable water supply pursuant to Section 19.07.041 of the San Luis Obispo County Code.

10. Health Department approval. Where a permit is requested pursuant to this title to construct, convert, alter or remodel a restaurant, bakery, commissary, food establishment open to the outside air, retail dairy, roadside stand, retail food production and marketing establishment, public swimming pool, organized camp or public water supply system, the filing and processing of permit applications and plans shall occur as set forth in Chapter 8.06 of the San Luis Obispo County code.

11. Land Use Permit required. Where a discretionary land use or subdivision permit is required for a project by Title 22 or Title 23 of the San Luis Obispo County Code, no construction permit application for such project shall be submitted until all required land use or subdivision permits have been approved.

    Exception: When approved by the Permit Center Manager – the required land use or subdivision permits have been applied for and accepted as complete and a Concurrent Processing Form has been signed and submitted by the applicant.

105.3.1 Action on Application. The building official shall examine or cause to be examined applications for permits and amendments hereto within a reasonable time after filing. If the application or the construction documents do not conform to the requirements of pertinent laws, the building official shall reject such application in writing, stating the reason therefor. If the building official is satisfied that the proposed work conforms to the requirements of this code and laws and ordinances applicable thereto, the building official shall issue a permit therefor as soon as practicable.

No construction permit shall be issued unless the building official first finds that the proposed land use, site work and construction:

1. Comply with all applicable provisions of this title; and

2. Comply with all applicable provisions of the Land Use Ordinance and Coastal Zone Land Use Ordinance (Titles 22 and 23 of the San Luis Obispo County Code, respectively), including but not limited to Sections 22.01.020, 22.01.060 and 22.01.070 and 23.01.031, Chapter 22.52 and Chapter 23.05; and

3. Are proposed on a legal lot of record, pursuant to the definition of "parcel" contained in the Land Use Ordinance, Title 22 of the San Luis Obispo County Code or, where applicable, the Coastal Zone Land Use Ordinance, Title 23 of the San Luis Obispo County Code; and

4. Are proposed on a site that has been determined by the Director of Planning and Building to have legal physical access to a public road as required by Land Use Ordinance or, where applicable, Coastal Zone Land Use Ordinance;

Are consistent with any limitations on building site locations shown or described on a final or parcel map or an informational sheet recorded with such map; andAre consistent with the details of the project described in any negative declaration issued for the subdivision which created the subject parcel, or any mitigation measures adopted as part of a certified environmental impact report for the project.

105.3.1.1 Determination of substantially improved or substantially damaged existing buildings in flood hazard areas. For applications for reconstruction, rehabilitation, addition or other improvement of existing buildings or structures located in an area prone to flooding as established by Table R30 1.2(1), the building official shall examine or cause to be examined the construction documents and shall prepare a finding with regard to the value of the proposed work. For buildings that have sustained damage of any origin, the value of the proposed work shall include the cost to repair the building or structure to its pre-damaged condition. If the building official finds that the value of proposed work equals or exceeds 50 percent of the market value of the building or structure before the damage has occurred or the improvement is started, the finding shall be provided to the Applicant. Applications determined to constitute substantial improvement or substantial damage shall require all existing portions of the entire building or structure to meet the requirements of Section R322.

105.3.2 Time limitation of construction permit application. An application for a construction permit for any proposed work has 360 days after the date of filing for the application to be issued as a permit. The building official is authorized to grant an extension for an additional period not exceeding 180 days. This can be done a maximum of seven times. Each 180 day time extension shall be requested in writing and justifiable cause demonstrated. If a delay in issuing the permit has been caused by a public agency having jurisdiction over the permit, the building official may grant an additional extension not exceeding the length of that delay. Regardless of the above, if new state building standards (CCR Title 24) become effective after the application date, then after two extensions or 360 days the application shall expire. In order to renew action on an application after expiration, the applicant shall resubmit plans and pay a new plan review fee.

105.3.3 Expiration of as-built construction permit application. If a permit application is for work that was started and/or completed prior to the issuance of the permit (also known as as-built), the application shall be valid for a time period of 90 days from the date of application. Failure to issue a permit from the application within this time period will cause the application to be expired and referred to code enforcement. No extensions are allowed without express permission from the building official. Payment plans for required fees may be requested in writing by the applicant and may be authorized by the Building Official for due cause.

105.4 Validity of issued construction permit. The issuance or granting of a permit shall not be construed to be a permit for, or an approval of, any violation of any of the provisions of this code or of any other ordinance of the jurisdiction. Permits presuming to give authority to violate or cancel the provisions of this code or other ordinances of the jurisdiction shall not be valid. The issuance of a permit based on construction documents and other data shall not prevent the building official from requiring the correction of errors in the construction documents and other data. The building official is also authorized to prevent occupancy or use of a structure where in violation of this code or of any other ordinances of this jurisdiction.

105.5 Expiration of issued construction permit. Every permit issued shall become invalid as follows:

1. Permits for buildings with a floor area of 1,000 square feet or greater shall remain valid for a time period of three years from the date of issuance.

2. Permits for buildings with a floor area of less than 1,000 square feet or for other miscellaneous work shall remain valid for a time period of one year from date of issuance.

3. Permits for work that was started and/or completed prior to issuance of the permit (also known as as-built) shall be valid for a time period of 90 days from the date of issuance.

105.5.1 Request for extension of issued construction permit. The building official may extend the time for completion of the work authorized by a valid permit upon a written request and the payment of a permit extension fee. The time extension shall be for a period of one year. The fee for a permit time extension shall be one-third of the original inspection fee, but not less than two hundred dollars. A maximum of two one year time extensions shall be granted. Further time extensions are to be determined by building official special request and will cost one half the inspection fee, but not less than two hundred dollars.

105.5.2 Request for As-Built construction permit extension. Time extension for an as-built permit may only be authorized by the building official for due cause. Expired as built permits are immediately referred to Code Enforcement. The same extension fees in 105.5.1 shall apply.

105.5.3 Request for 30 day extension to finalize issued construction permit. A permit may be extended an additional 30 days from the expiration date if the only inspection remaining is the final inspection and not more than 30 days have passed from the date of expiration. An extension fee of two hundred dollars ($200.00) must be paid. All conditions prior to final must be met and the final inspection passed within 30 days. A maximum of two extensions may be granted. As-built permits are not eligible for this without a written request to the building official.

105.5.4 Renewal after issued construction permit expiration. When a permit has expired pursuant to Section 105.5, a replacement permit shall be obtained before work is resumed. Provided that no work has started, no changes have been made in the original approved plans/specifications and that the replacement permit is obtained before one year of the date of expiration of the original permit or before the fee schedule and the codes change. The fee for the replacement permit shall be one-half of the inspections fee but no less than $200.00 For work where some inspections have been made, the building official shall determine the fee based on the amount of work remaining to be completed. In order to renew action on an expired permit when the fee schedule and the codes have changed, the applicant shall pay a full plan check and inspection fees for the replacement permit based on the current adopted fee schedule and the project shall be considered a new project.

105.6 Suspension or revocation. The building official is authorized to suspend or revoke a construction permit application or issued construction permit under the provisions of this code wherever the permit is applied/issued in error or on the basis of incorrect, inaccurate or incomplete information, or in violation of any ordinance or regulation or any of the provisions of this code.

105.7 Placement of construction permit. The approved plans, building permit and the building inspection record shall be made available whenever inspections are requested. The permit site inspection card (pink card stock) shall be posted on the site of the work and prominently displayed until the completion of the project.

105.8 Responsibility. It shall be the duty of every person who performs work for the installation or repair of building, structure, electrical, gas, mechanical or plumbing systems, for which this code is applicable, to comply with this code.

105.9 Preliminary inspection. Before issuing a permit, the building official is authorized to examine or cause to be examined buildings, structures and sites for which an application has been filed.

c. Amend CRC Section R100 to read:

R100.1 Inspection Card as Certificate of Occupancy. The signed and dated Final Inspection on the Inspection Record is considered the Certificate of Occupancy for R-3 structures and all R-3 accessory structures.

d. Amend CBC 111.1 to read:

111.1 Use and occupancy. No building or structure shall be used or occupied, and no change in the existing occupancy classification of a building or structure or portion thereof shall be made, until the building official has issued a certificate of occupancy therefor as provided herein. Issuance of a certificate of occupancy shall not be construed as an approval of a violation of the provisions of this code or of other ordinances of the jurisdiction.

Exceptions:

1. Certificates of occupancy are not required for work exempt from permits under Section 105.2.
2. The signed and dated Final Inspection on the Inspection Record is considered the Certificate of Occupancy for R-3 structures and all R-3 accessory structures.

e. Eliminate CRC Section R112 – CBC Section 113 covers Board of Appeals

f. Eliminate CRC Section R114 – CBC Section 115 covers Stop Work Orders

19.02.030 - Prohibited Structures. It shall be unlawful and a violation of this code for any person to:

a. Use for habitation, storage or any structural purpose, any new, discarded, salvaged, abandoned or replaced travel trailer, cargo container, streetcar, bus body, rail car or other vehicle body, except:

1. Cargo containers may be used pursuant to Section 19.02.080 of this title.

2. Rail cars may be used as part of a retail commercial or restaurant structure when the rail car is modified under a permit issued pursuant to this title so as to be in conformity with all California Building Code requirements applicable to its

proposed occupancy and the land use is approved by the Planning Commission pursuant to Titles 22 or 23 of this code.

b. Use a travel trailer or recreational vehicle for residential purposes, except in an approved campground or recreational vehicle park, or in other situations allowed by Titles 22 or 23 of this code.

19.02.040 - Noise Mitigation Measures. Development requiring a building permit shall comply with the Noise Element of the County General Plan.

19.02.050 - Drainage and Grading Regulations. All construction activities that may affect the velocity, direction or volume of natural drainage occurring on or in the vicinity of the construction site, or that involves site preparation, vegetation removal, earth moving, excavation, filling, or other grading activities shall comply with all applicable provisions of the Land Use Ordinance, Title 22, or where applicable, the Coastal Zone Land Use Ordinance, Title 23 and the provisions of 19.03.010(e) of this code.

19.02.060 - Demolition of Historic Structures. No person shall demolish, and the building official shall issue no permit for the demolition of, any building or structure identified by the Land Use Element of the San Luis Obispo County General Plan as being within an Historic (H) Combining Designation, without first complying with all applicable provisions of the Land Use Ordinance, Title 22 of this code, or the Coastal Zone Land Use Ordinance, Title 23 of this code.

19.02.070 - Discovery of Archeological Resources. In the event archeological resources are unearthed or discovered during any construction activities, the following standards apply:

a. Construction activities shall cease, and the Environmental Coordinator and Department of Planning and Building shall be notified so that the extent and location of discovered materials may be recorded by a qualified archeologist, and disposition of artifacts may be accomplished in accordance with state and federal law.

b. In the event archeological resources are found to include human remains, or in any other case when human remains are discovered during construction, the County Coroner is to be notified in addition to the Department of Planning and Building and Environmental Coordinator so proper disposition may be accomplished.

19.02.080 - Cargo Containers. Shipping containers of the type used for rail and marine terminal cargo may be used for storage or other structural purposes (except human habitation), subject to the following requirements:

a. **Conformity with code required**. The cargo container shall be modified under a permit issued pursuant to this title so as to be in conformity with all California Building Code requirements applicable to its proposed occupancy.

b. **Limitation on location**. Cargo containers may be used for storage or other structural purposes only in the following land use categories, as such categories are defined by the Land Use Ordinance, Title 22, of this code, or Coastal Zone Land Use Ordinance, Title 23 of this code:

1. Within the Agriculture or Rural Lands land use categories on parcels of 20 acres or larger; or where the director of planning and building determines that such containers will not be visible from public roads or adjoining ownerships;

2. Within the Commercial Service or Industrial land use categories, where such containers are screened pursuant to Sections 22.04.190c or 23.04.190c of this code, so as to not be visible from public roads.

3. **Uniform appearance required.** Where multiple cargo containers are used within a Commercial or Industrial land use category, they shall be painted the same color. Cargo containers shall not be stacked.

19.02.090 - Portable Aircraft Hangers. Portable T-hanger trailers may be permitted by the building official to be installed on any airport site approved pursuant to Titles 22 or 23 of this code when such hangers satisfy the following requirements:

a. The location of the installation is approved by the management of the subject airport.

b. The installation is in accordance with the manufacturer's "Approved Installation Procedures" signed by a California-licensed civil engineer.

c. The permittee is responsible for a certification of the installation and testing of the anchors, and shall submit a letter to the building official certifying the compliance of each unit with the manufacturer's procedures. It shall be the permittee's responsibility to see that the anchors remain installed at all times in accordance with the manufacturer's procedures.

d. The insignia of registration as a motor vehicle of the State of California shall be maintained and current license plates must be posted on the trailer.

e. The portable T-hanger trailers shall be used for storage of aircraft and related equipment only. No water or sanitary facilities shall be permitted in such structure.

f. The portable T-hanger trailer shall be equipped with permanent ventilation as required for Group S, Division 3 occupancies in the California Building Code.

g. The portable T-hanger trailers shall be maintained in a usable and mobile condition.

h. The finish exterior color shall be approved by the management of the affected airport.

19.03.010 - Modifications of the California Building Code. The 2013 California Building Code adopted in Section 19.01.040 is modified, amended and/or supplemented as follows:

a. Delete Appendix A, B, D, E, F, J and K.
Adopt Appendix C - GROUP U-AGRICULTURAL BUILDINGS
Adopt Appendix G - FLOOD• RESISTANT CONSTRUCTION
Adopt Appendix H - SIGNS
Adopt Appendix I - PATIO COVERS

b. Section 505.1 “Address Identification” is amended to read as follows:

501.2 Address Identification. New and existing buildings shall have approved address numbers, building numbers or approved building identification placed in a position that is plainly legible and visible from the street or road fronting the property. . Where required by the fire code official, address numbers shall be approved in additional approved locations to facilitate emergency response. These numbers shall contrast with their background. Address numbers shall be Arabic numerals or alphabet letters. Numbers shall be a minimum of: Residential 6 inches, Commercial 8 inches, and Industrial 10 inches high with a minimum stroke width of 0.5 inch (12.7mm).

505.1.1 Directories. Where access is by means of a private road and the building cannot be viewed by and the building cannot be viewed from the public way, a monument, pole or other sign or means shall be used to identify the structure. Address numbers shall be maintained. When required by the fire code official, complexes with multiple buildings may be required to provide directories, premises maps and directional signs. The scale, design and location of directory signs shall be approved by the fire code official and may be required to be illuminated.

c. Add Section 504.4 "Roof Access" is added to read as follows:

504.4 Stairway access to roof. New buildings two or more stories above grade plane, except those with a roof slope greater than four units vertical in 12 units horizontal (33.3-percent slope), shall be provided with a stairway to the roof or other access to the roof for emergency personnel approved by the fire code official. Stairway access to the roof shall be in accordance with Section 1009. Such stairway or other approved access shall be marked at street and floor levels with a sign indicating that the stairway or access continues to the roof. Where roofs are used for roof gardens or for other purposes, stairways shall be provided as required for such occupancy classification.

d. Add Section 711A to read as follows:

SECTION 711A WAIVER OF REQUIREMENTS

711A.1 The Building Official may waive the requirements of this chapter, in whole or in part, for specific construction projects on a case by case basis within a Fire Hazard Severity Zone when such waiver is approved by the Fire Marshal, based upon site conditions which justify a reduction in fire resistance. A Request for Code Modification Form shall be completed and the applicable fee paid for such waiver.

e. Delete Sections 903.2 through 903.2.11.3. Amend Sections 903.2 to read as follows:

903.2 Fire Sprinklers Where required. Unless otherwise established by the local Fire Marshal or other applicable code, an approved automatic fire sprinkler system shall be installed per the following Tables:

Table 903.1 – Automatic Fire Sprinkler System Requirements for NEW CONSTRUCTION

Structure Type	Sprinklers Required [5]	Description	Square Footage [1]		Requirements	Exceptions	Examples	Min. Distance Between Structures and Property lines(PL)
			Min	Max				
New Construction	Yes	New buildings including mobile homes and commercial coaches [1]	0		Throughout new buildings	See Footnote [3,4]	All new construction and dwellings	Per CBC, CRC
Residential Accessory Structure	Yes	Accessory structures as defined in CRC	1,000	3,000	No heating or cooling No living or sleeping spaces	See Footnote [2]	One story garage, workshop, studio, residential storage bldg	50 feet from PL, 30 feet from other structures
Agricultural Accessory Structure	Yes	Accessory to agricultural operation, livestock, crops. Agricultural operations in accordance with AG LUO & CBC definition	3,000	5,000	Primary usage must be 75% livestock or crops (affidavit required)	See Footnote [2]	One story barn or stables	100 feet from PL, 50 feet from other structures
Pole barn, Covered arena, Greenhouse	No	One story hay storage, covered riding arena, greenhouses	Unlimited if 60 feet on all sides per CBC		No employees, no public attendance and open on two or more sides	None	See description	100 feet from PL, 50 feet from other structures
Agricultural Exempt (no permit required)	No	LUO Ag Exempt & signed affidavit	0	3,000	Per Ag Exempt agreement (affidavit required)	See Title 19	Ag-Barn on Ag zoned land over 20 acres	100 feet from PL, 50 feet from other structures

References:

CRC: California Residential Code │ CFC: California Fire Code │ CBC: California Building Code │ LUO: Land Use Ordinance (San Luis Obispo County)

Footnotes:

1. For the purpose of calculating square footage for the application of fire sprinkler requirements and fire flow requirements, the floor area shall include all combustible areas attached to the structure, including garages, patio covers, overhangs over 2 feet, covered walkways and decks.
2. Structures over the minimum square footage must meet **all of the a**bove table requirements **and all the following requirements**:

   ▪ no conditioned or habitable space,▪ no second stories (lofts 1/3 the floor area and open to below are allowed), ▪ minimum two exits including one pedestrian door (side hinge swinging door), ▪ workshops or offices limited to 10% of floor area, ▪ dedicated fire water storage minimum of 5,000 gallons steel tank in full compliance with NFPA 1142(see fire safety plan) if there is no community provided fire hydrant within 500 ft.,▪ structure complies with the California Wildland Urban-Interface Ignition Resistant Construction Requirements, ▪ heat detectors installed in accordance with CBC linked to an audible bell mounted in the exterior of the structure. ▪ Cannot be used as a place of employment or for public assemblage/events. ▪ Cannot be used as a commercial building.
3. A single-story building or commercial coach where floor area does not exceed 1000 square feet and the occupancy is not a Group A, E Daycare, F1 Woodworking, R, Group H, Group I occupancy or any occupancy where cellulose nitrate film, pyroxylin plastics or any hazardous materials manufactured, stored or handled in quantities in excess of Tables in CBC, CFC or within Los Osos CSD and the fire flow from a hydrant is less that 750gpm at 20psi.
4. Mobile/manufactured or factory built homes or commercial coaches constructed or altered on or before March 12, 2011 which were not manufactured with automatic fire sprinklers.
5. Automatic Fire Sprinklers installed at exterior locations shall be approved corrosion resistant devices when environmental or operational conditions warrant.

Table 903.2 – Automatic Fire Sprinkler System Requirements for EXISTING CONSTRUCTION [6]

Occupancy or Structural Modification Type	Sprinklers Required [3]	Description	Square Footage [1]	Requirements	Exceptions	Examples
Alterations [1]	Yes…if	Alteration includes modifications to the structure which involve complete removal and replacement of wall board within any room	50% of existing floor area [1]	Alterations, additions and remodel square footage will be considered a combined and cumulative sum of floor area [1]	Repairs [5] and Footnote [2]	Interior remodels, Rehabilitation
Additions [1]	Yes…if	Additions cumulative from January 01, 2008 regardless of any change of ownership	1,000 sf or 50% of floor area[1]	Alterations, additions and remodel square footage will be considered a combined and cumulative sum of floor area [1]	none	Any addition
Additional Stories	Yes	Adding an additional story	Any	Attic/basement conversions over 1,000 sq.ft.	See Footnote [4]	Adding/converting any habitable space above or below an existing structure
Sprinklered Buildings	Yes	Any occupancy	Any	Partially sprinklered structures not allowed	None	Any sprinklered building
Occupancy Classification Change	Yes	Change results in higher hazard or as deemed necessary by fire code official	Any	Hazard classification rating per Title 19 Table 3408.1.2	None	Detached garage, workshop or barn converted to conditioned space, guest house or commercial use
Hazardous Materials Inside buildings	Yes	Cellulose nitrate film or pyroxylin plastics or any hazardous materials manufactured, stored or handled in quantities in excess of Tables in CBC, CFC	Any	Building and any portion of a building must also include requirements as listed in CFC Chapter 5005.4	None	Any occupancy

References:

CRC: California Residential Code | CFC: California Fire Code | CBC: California Building Code |

Footnotes:

1. For the purpose of calculating square footage for the application of fire sprinkler requirements and fire flow requirements, the floor area shall include all combustible areas attached to the structure, including garages, patio covers, overhangs over 2 feet, and covered walkways and decks.
2. Alterations limited to **only** one of the following: replacement of exterior coverings and windows, roofing, electrical services, sewer laterals, retaining walls, or routine plumbing, electrical and mechanical repairs.
3. Automatic Fire Sprinklers installed at exterior locations shall be approved corrosion resistant devices when environmental conditions warrant.
4. A loft open to the floor below and no more than one third of the floor area of the room below is allowed to be added without triggering sprinklers.
5. REPAIR is the reconstruction or renewal for the purpose of maintenance. See 105.2.2 in Title 19.20.020 and the definition of alteration in the CBC.
6. Mobile/manufactured or factory built homes or commercial coaches constructed or altered on or before March 12, 2011 which were not manufactured with automatic fire sprinklers are not subject to fire sprinkler requirements.

f. Section 905.3 “Required installations Standpipe systems” is amended to read as follows:

905.3.1 Building height and area. Class III standpipe systems shall be installed throughout buildings where the floor level of the highest story is located more than 30 feet (9144 mm) above the lowest level of the fire department vehicle access, or where the floor level of the lowest story is located more than 30 feet (9144 mm) below the highest level of fire department vehicle access and in any parking structure.

A building that is greater than 20,000 square feet (1.858 m2) of floor area and greater than18 feet (5.49 m) in height shall have a dry or wet standpipe system with a 2 ½ inch (64 mm) outlet at the roof near the roof access. Location of the outlet and the fire department connection to the standpipe shall be labeled and approved by the fire code official.

g. Section 1009.16 “Stairway to roof” is amended by addition thereto to read as follows:

1009.16 New buildings two or more stories above grade plane, except those with a roof slope greater than four units vertical in 12 units horizontal (33.3-percent slope), shall be provided with a stairway to the roof or other access to the roof for emergency personnel approved by the fire code official. Stairway access to the roof shall be in accordance with Section 1009. Such stairway or other approved access shall be marked at street and floor levels with a sign indicating that the stairway or access continues to the roof. Where roofs are used for roof gardens or for other purposes, stairways shall be provided as required for such occupancy classification.

h. Add the following to Section 1804

1804.7 Excavation and Grading Standards for County of San Luis Obispo

SECTION 1804.7.1 - PURPOSE

The purpose of this appendix is to safeguard life, limb, property and the public welfare by regulating grading on private property.

SECTION 1804.7.2 - SCOPE

The rules and regulations to control excavation, grading, and earthwork construction, including fills and embankments, are contained in Titles 22 and 23 of the County Code. Where provisions of Title 19 conflict with provisions in Titles 22 or 23, the provisions in Titles 22 and 23 shall prevail.

The standards listed below are recognized standards and as such are not adopted as part of this code.

1. Testing
   1.1 ASTM D 1557, Moisture-density Relations of Soils and Soil Aggregate Mixtures
   1.2 ASTM D 1556, In Place Density of Soils by the Sand-Cone Method
   1.3 ASTM D 2167, In Place Density of Soils by the Rubber-Balloon Method
   1.4 ASTM D 2937, In Place Density of Soils by the Drive-Cylinder Method

1.5 ASTM D 2922 and D 3017, In Place Moisture Contact and Density of Soils by Nuclear Methods

SECTION 1804.7.3 - PERMITS REQUIRED

1804.7.3.1 Permits Required. Except as specified in Titles 22 (Land Use Ordinance) and 23 (Coastal Zone Land Use Ordinance) of the County Code, no person shall do any grading without first having obtained a grading permit from the building official.

SECTION 1804.7.4 – HAZARDS

Whenever the building official determines that any existing excavation or embankment or fill on private property has become a hazard to life and limb, or endangers property, or adversely affects the safety, use or stability of a public way or drainage channel, the owner of the property upon which the excavation or fill is located, or other person or agent in control of said property, upon receipt of notice in writing from the building official, shall within the period specified therein repair or eliminate such excavation or embankment so as to eliminate the hazard and be in conformance with the requirements of this code.

SECTION 1804.7.5 – DEFINITIONS

For the purposes of this section the definitions listed hereunder shall be construed as specified in this section.

APPROVAL shall mean the proposed work or completed work conforms to this chapter in the opinion of the building official.

AS-GRADED is the extent of surface conditions on completion of grading.

BEDROCK is in-place solid rock.

BENCH is a relatively level step excavated into earth material on which fill is to be placed.

BORROW is earth material acquired from an off-site location for use in grading on a site.

CIVIL ENGINEER is a professional engineer registered in the state to practice in the field of civil works.

CIVIL ENGINEERING is the application of the knowledge of the forces of nature, principles of mechanics and the properties of materials to the evaluation, design and construction of civil works.

COMPACTION is the densification of a fill by mechanical means.

EARTH MATERIAL is any rock, natural soil or fill or any combination thereof.

ENGINEERING GEOLOGIST is a geologist experienced and knowledgeable in engineering geology.

ENGINEERING GEOLOGY is the application of geologic knowledge and principles in the investigation and evaluation of naturally occurring rock and soil for use in the design of civil works.

EROSION is the wearing away of the ground surface as a result of the movement of wind, water or ice.

EXCAVATION is the mechanical removal of earth material.

FILL is a deposit of earth material placed by artificial means.

GEOTECHNICAL ENGINEER. See "soils engineer."

GRADE is the vertical location of the ground surface.
Existing Grade is the grade prior to grading.
Finish Grade is the final grade of the site which conforms to the approved plan.
Rough Grade is the stage at which the grade approximately conforms to the approved plan.

GRADING is any excavating or filling or combination thereof.

KEY is a designed compacted fill placed in a trench excavated in earth material beneath the toe of a proposed fill slope.

PROFESSIONAL INSPECTION is the inspection required by this code to be performed by the civil engineer, soils engineer or engineering geologist. Such inspections include that performed by persons supervised by such engineers or geologists and shall be sufficient to form an opinion relating to the conduct of the work.

SITE is any lot or parcel of land or contiguous combination thereof, under the same ownership, where grading is performed or permitted.

SLOPE is an inclined ground surface the inclination of which is expressed as a ratio of horizontal distance to vertical distance.

SOIL is naturally occurring superficial deposits overlying bedrock.

SOILS ENGINEER (GEOTECHNICAL ENGINEER) is an engineer experienced and knowledgeable in the practice of soils engineering (geotechnical) engineering.

SOILS ENGINEERING (GEOTECHNICAL ENGINEERING) is the application of the principles of soils mechanics in the investigation, evaluation and design of civil works involving the use of earth materials and the inspection or testing of the construction thereof.

TERRACE is a relatively level step constructed in the face of a graded slope surface for drainage and maintenance purposes.

SECTION 1804.7.6 - GRADING PERMIT REQUIREMENTS

1804.7.6.2 Application. Grading permit application contents are as specified in Section 22.52.050 of the Land Use Ordinance and Section 23.05.020 et seq. of the Coastal Zone Land Use Ordinance.

1804.7.6.3 Grading Designation Grading is designated as specified in Section 22.52.060 of the Land Use Ordinance and Section 23.05.020 et seq. of the Coastal Zone Land Use Ordinance.

1804.7.6.4 Engineered Grading Requirements. Application for a grading permit shall be accompanied by two sets of plans and specifications, and supporting data consisting of a soils engineering report and engineering geology report. The plans and specifications shall be prepared and signed by an individual licensed by the state to prepare such plans or specifications when required by the building official.

Specifications shall contain information covering construction and material requirements.

Plans shall be drawn to scale upon substantial paper or cloth and shall be of sufficient clarity to indicate the nature and extent of the work proposed and show in detail that they will conform to the provisions of this code and all relevant laws, ordinances, rules and regulations. The first sheet of each set of plans shall give location of the work, the name and address of the owner and the person by whom they were prepared.

The plans shall include the following information:

1. General vicinity of the proposed site.
2. Property limits and accurate contours of existing ground and details of terrain and area drainage.
3. Limiting dimensions, elevations or finish contours to be achieved by the grading, and proposed drainage channels and related construction.
4. Detailed plans of all surface and subsurface drainage devices, walls, cribbing, dams and other protective devices to be constructed with, or as a part of, the proposed work together with a map showing the drainage area and the estimated runoff of the area served by any drains.
5. Location of any buildings or structures on the property where the work is to be performed and the location of any buildings or structures on land of adjacent owners which are within 15 feet of the property or which may be affected by the proposed grading operations.
6. Recommendations included in the soils engineering report and the engineering geology report shall be incorporated in the grading plans or specifications. When approved by the building official, specific recommendations contained in the soils engineering report and the engineering geology report, which are applicable to grading, may be included by reference.
7. The dates of the soils engineering and engineering geology reports together with the names, addresses and phone numbers of the firms or individuals who prepared the reports.

1804.7.6.5 Soils Engineering Report. The soils engineering report required by Section 1803 or 1804.7.6.4 shall include data regarding the nature, distribution and strength of existing soils, conclusions and recommendations for grading procedures and design criteria for corrective measures, including buttress fills, when necessary, and opinion on adequacy for the intended use of sites to be developed by the proposed grading as affected by soils engineering factors, including the stability of slopes.

1804.7.6.6 Engineering Geology Report. The engineering geology report required by Section 1803 or 1804.7.6.4 shall include an adequate description of the geology of the site, conclusions and recommendations regarding the effect of geologic conditions on the proposed development, and opinion on the adequacy for the intended use of sites to be developed by the proposed grading, as affected by geologic factors.

1804.7.6.7 Liquefaction Study. The building official may require a geotechnical investigation in accordance with Sections 1803.1 and 1803.2 when, during the course of an investigation, all of the following conditions are discovered, the report shall address the potential for liquefaction:

1. Shallow ground water, 50 feet or less.
2. Unconsolidated sandy alluvium.
3. Seismic Design Category C - F.

1804.7.6.8 Regular Grading Requirements. Each application for a grading permit shall be accompanied by a plan in sufficient clarity to indicate the nature and extent of the work. The plans shall give the location of the work, the name of the owner and the name of the person who prepared the plan. The plan shall include the following information:

1. General vicinity of the proposed site.
2. Limiting dimensions and depth of cut and fill.
3. Location of any buildings or structures where work is to be performed, and the location of any buildings or structures within 15 feet of the proposed grading.

1804.7.6.9 Issuance. The provisions of Section 105 are applicable to grading permits. The building official may require that grading operations and project designs be modified if delays occur which incur weather-generated problems not considered at the time the permit was issued.

The building official may require professional inspection and testing by the soils engineer. When the building official has cause to believe that geologic factors may be involved, the grading will be required to conform to engineered grading.

SECTION 1804.7.7 - GRADING FEES

1804.7.7.1 General. Fees shall be assessed as set forth in the fee schedule adopted by the jurisdiction and fees shall be assessed as specified in Section 22.52.210 of the Land Use Ordinance and Section 22.05.058 of the Coastal Zone Land Use Ordinance. .

SECTION 1804.7.8 - BONDS

The building official may require bonds, as specified in Section 22.52.210 of the Land Use Ordinance and Section 23.05.032.c of the Coastal Zone Land Use Ordinance.

SECTION 1804.7.9 - CUTS

1804.7.9.1 General. Unless otherwise recommended in the approved soils engineering or engineering geology report, cuts shall conform to the provisions of this section. In the absence of an approved soils engineering report, these provisions may be waived for minor cuts not intended to support structures.

1804.7.9.2 Slope. The slope of cut surfaces shall be no steeper than is safe for the intended use and shall be no steeper than 1 unit vertical in 2 units horizontal (50% slope) unless the permittee furnishes a soils engineering or an engineering geology report, or both, stating that the site has been investigated and giving an opinion that a cut at a steeper slope will be stable and not create a hazard to public or private property.

SECTION 1804.7.10 - FILLS

1804.7.10.1 General. Unless otherwise recommended in the approved soils engineering report, fills shall conform to the provisions of this section. In the absence of an approved soils engineering report, these provisions may be waived for minor fills not intended to support structures.

1804.7.10.2 Preparation of Ground. Fill slopes shall not be constructed on natural slopes steeper than 1 unit vertical in 2 units horizontal (50% slope). The ground surface shall be prepared to receive fill by removing vegetation, noncomplying fill, topsoil and other unsuitable materials scarifying to provide a bond with the new fill and, where slopes are steeper than 1 unit vertical in 5 units horizontal (20% slope) and the height is greater than 5 feet, by benching into sound bedrock or other competent material as determined by the soils engineer. The bench under the toe of a fill on a slope steeper than 1 unit vertical in 5 units horizontal (20% slope) shall be at least 10 feet wide. The area beyond the toe of fill shall be sloped for sheet overflow or a paved drain shall be provided. When fill is to be placed over a cut, the bench under the toe of fill shall be at least 10 feet wide but the cut shall be made before placing the fill and acceptance by the soils engineer or engineering geologist or both as a suitable foundation for fill.

1804.7.10.3 Fill Material. Detrimental amounts of organic material shall not be permitted in fills. Except as permitted by the building official, no rock or similar irreducible material with a maximum dimension greater than 12 inches shall be buried or placed in fills.

Exception: The building official may permit placement of larger rock when the soils engineer properly devises a method of placement, and continuously inspects its placement and approves the fill stability. The following conditions shall also apply:

1. Prior to issuance of the grading permit, potential rock disposal areas shall be delineated on the grading plan.
2. Rock sizes greater than 12 inches in maximum dimension shall be 10 feet or more below grade, measured vertically.
3. Rocks shall be placed so as to assure filling of all voids with well-graded soil.

1804.7.10.4 Compaction. All fills shall be compacted to a minimum of 90 percent of maximum density.

1804.7.10.5 Slope. The slope of fill surfaces shall be no steeper than is safe for the intended use. Fill slopes shall be no steeper than 1 unit vertical in 2 units horizontal (50% slope).

SECTION 1804.7.11 – SETBACKS

1804.7.11.1 General. Cut and fill slopes shall be set back from site boundaries in accordance with this section. Setback dimensions shall be horizontal distances

measured perpendicular to the site boundary. Setback dimensions shall be as shown in Figure A-1804.7.11-1.

1804.7.11.2 Top of Cut Slope. The top of cut slopes shall not be made nearer to a site boundary line than one fifth of the vertical height of cut with a minimum of 2 feet and a maximum of 10 feet. The setback may need to be increased for any required interceptor drains.

1804.7.11.3 Toe of Fill Slope. The toe of fill slope shall be made not nearer to the site boundary line than one half the height of the slope with a minimum of 2 feet and a maximum of 20 feet. Where a fill slope is to be located near the site boundary and the adjacent off-site property is developed, special precautions shall be incorporated in the work as the building official deems necessary to protect the adjoining property from damage as a result of such grading. These precautions may include but are not limited to:

1. Additional setbacks.
2. Provision for retaining or slough walls.
3. Mechanical or chemical treatment of the fill slope surface to minimize erosion.
4. Provisions for the control of surface waters.

1804.7.11.4 Modification of Slope Location. The building official may approve alternate setbacks. The building official may require an investigation and recommendation by a qualified engineer or engineering geologist to demonstrate that the intent of this section has been satisfied.

Figure A-1804.7.11-1

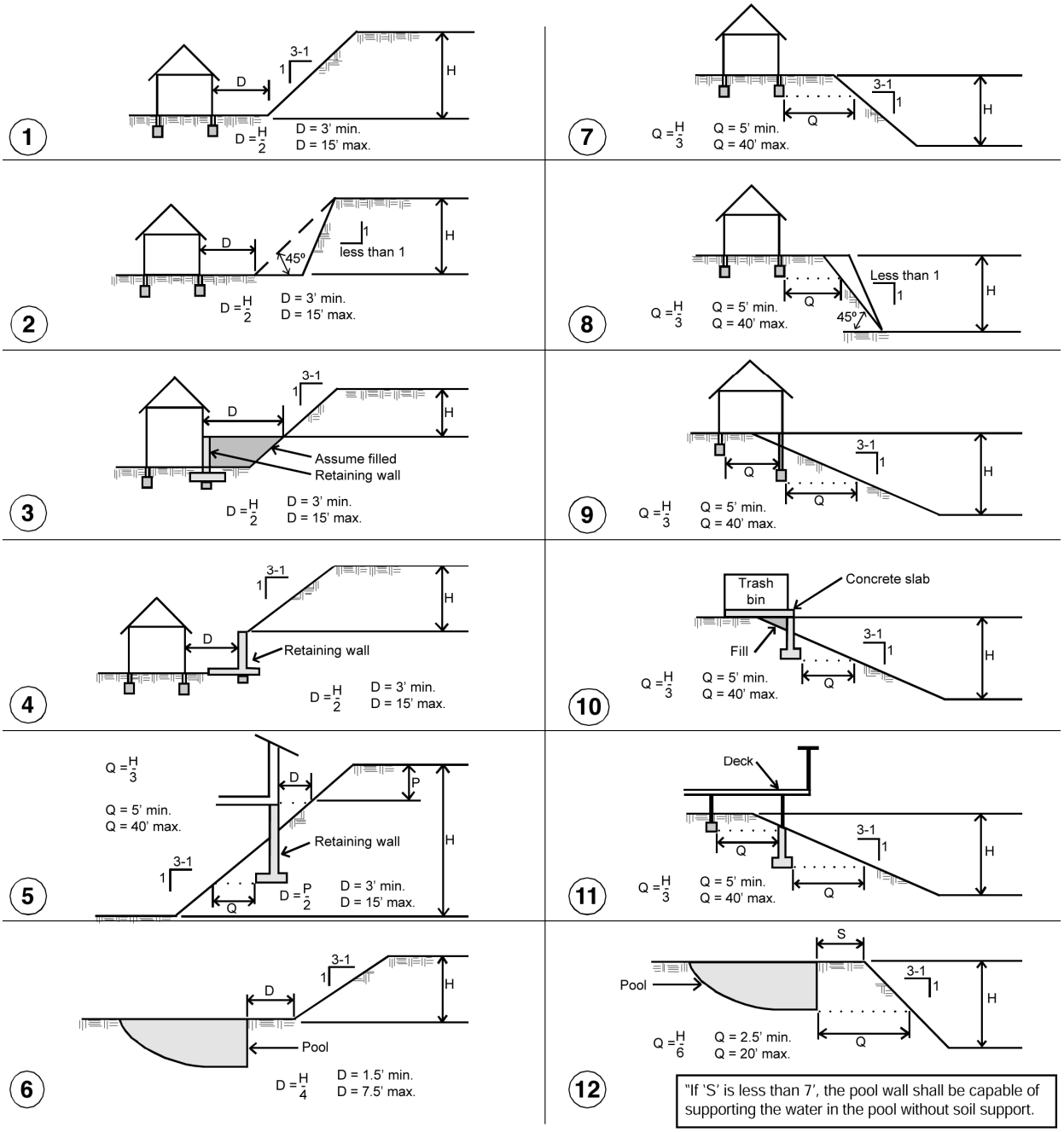

FOUNDATIONS ON OR ADJACENT TO SLOPES: The placement of buildings and structures on or adjacent to slopes steeper than 3 horizontal to 1 vertical shall be in accordance with the following illustrations. The provisions are intended to provide protection for the building from slope drainage, erosion and mudflow, loose slope debris, shallow slope failures, and foundation movement (California Building Code 1804).

SECTION 1804.7.12 - DRAINAGE AND TERRACING

1804.7.12.1 General. Unless otherwise indicated on the approved grading plan, drainage facilities and terracing shall conform to the provisions of this section for cut or fill slopes steeper than 1 unit vertical in 3 units horizontal (33.3% slope).

1804.7.12.2 Terrace. Terraces at least 6 feet in width shall be established at not more than 30-foot vertical intervals on all cut or fill slopes to control surface drainage and debris except that where only one terrace is required, it shall be at mid-height. For cut or fill slopes greater than 60 feet and up to 120 feet in vertical height, one terrace at approximately mid-height shall be 12 feet in width. Terrace widths and spacing for cut and fill slopes greater than 120 feet in height shall be designed by the civil engineer and approved by the building official. Suitable access shall be provided to permit proper cleaning and maintenance.

Swales or ditches on terraces shall have a minimum gradient of 5 percent and must be paved with reinforced concrete not less than 3 inches in thickness or an approved equal paving. They shall have a minimum depth at the deepest point of 1 foot and a minimum paved width of 5 feet.

A single run of swale or ditch shall not collect runoff from a tributary area exceeding 13,500 square feet (projected) without discharging into a down drain.

1804.7.12.3 Subsurface Drainage. Cut and fill slopes shall be provided with subsurface drainage as necessary for stability.

1804.7.12.4 Disposal. All drainage facilities shall be designed to carry waters to the nearest practicable drainage way approved by the building official or other appropriate jurisdiction as a safe place to deposit such waters. Erosion of ground in the area of discharge shall be prevented by installation of nonerosive down drains or other devices.

Building pads shall have a drainage gradient of 2 percent toward approved drainage facilities, unless waived by the building official.

Exception: The gradient from the building pad may be 1 percent if all of the following conditions exist throughout the permit area:

1. No proposed fills are greater than 10 feet in maximum depth.
2. No proposed finish cut or fill slope faces have a vertical height in excess of 10 feet.
3. No existing slope faces, which have a slope face steeper than 1 unit vertical in 10 units horizontal (10% slope), have a vertical height in excess of 10 feet .

1804.7.12.5 Interceptor Drains. Paved interceptor drains shall be installed along the top of all cut slopes where the tributary drainage area above slopes toward the cut and has a drainage path greater than 40 feet measured horizontally. Interceptor drains shall be paved with a minimum of 3 inches of concrete or gunite and reinforced. They shall have a minimum depth of 12 inches and a minimum paved width of 30 inches measured horizontally across the drain. The slope of drain shall be approved by the building official.

SECTION 1804.7.13 - EROSION CONTROL

1804.7.13.1 Slopes. The faces of cut and fill slopes shall be prepared and maintained to control against erosion. This control shall consist of approved Best Management Practices (BMPs) shown on the grading plans. The protection for the slopes shall be installed as soon as practicable and prior to calling for final approval.

1804.7.13.2 A Condition Compliance Monitoring case shall be required whenever there are post construction BMPs required to be monitored after the construction permit is finaled.

1804.7.13.3 No grading or structure inspections shall be made unless required BMPs are in place during the rainy season – October 15 through April 15.

SECTION 1804.7.14 - GRADING INSPECTION

1804.7.14.1 General. Grading operations for which a permit is required shall be subject to inspection by the building official. Professional inspection of grading operations shall be provided by the civil engineer, soils engineer and the engineering geologist retained to provide such services and approved by the building official in accordance with Section 1804.7.6.4 for engineered grading and as required by the building official for regular grading.

1804.7.14.2 Civil Engineer. The civil engineer shall provide professional inspection within such engineer's area of technical specialty, which shall consist of observation and review as to the establishment of line, grade and surface drainage of the development area. If revised plans are required during the course of the work they shall be prepared by the civil engineer.

1804.7.14.3 Soils Engineer. The soils engineer shall provide professional inspection within such engineer's area of technical specialty, which shall include observation during grading and testing for required compaction. The soils engineer shall provide sufficient observation during the preparation of the natural ground and placement and compaction of the fill to verify that such work is being performed in accordance with the conditions of the approved plan and the appropriate requirements of this chapter. Revised recommendations relating to conditions differing from the approved soils engineering and engineering geology reports shall be submitted to the permittee, the building official and the civil engineer.

1804.7.14.4 Engineering Geologist. The engineering geologist shall provide professional inspection within such engineer's area of technical specialty, which shall include professional inspection of the bedrock excavation to determine if conditions encountered are in conformance with the approved report. Revised recommendations relating to conditions differing from the approved engineering geology report shall be submitted to the soils engineer.

1804.7.14.5 Permittee. The permittee shall be responsible for the work to be performed in accordance with the approved plans and specifications and in conformance with the provisions of this code, and the permittee shall engage consultants, if required, to provide professional inspections on a timely basis. The permittee shall act as a coordinator between the consultants, the contractor and the building official. In the event

of changed conditions, the permittee shall be responsible for informing the building official of such change and shall provide revised plans for approval.

1804.7.14.6 Building Official. The building official shall inspect the project at the various stages of work requiring approval to determine that adequate control is being exercised by the professional consultants.

1804.7.14.7 Notification of Noncompliance. If, in the course of fulfilling their respective duties under this chapter, the civil engineer, the soils engineer or the engineering geologist finds that the work is not being done in conformance with this chapter or the approved grading plans, the discrepancies shall be reported immediately in writing to the permittee and to the building official.

1804.7.14.8 Transfer of Responsibility. If the civil engineer, the soils engineer, or the engineering geologist of record is changed during grading, the work shall be stopped until the replacement has agreed in writing to accept their responsibility within the area of technical competence for approval upon completion of the work. It shall be the duty of the permittee to notify the building official in writing of such change prior to the recommencement of such grading.

SECTION 1804.7.15 - COMPLETION OF WORK

1804.7.15.1 Final Reports. Upon completion of the rough grading work and at the final completion of the work, the following reports and drawings and supplements thereto are required for engineered grading or when professional inspection is performed for regular grading, as applicable.

1. An as-built grading plan prepared by the civil engineer retained to provide such services in accordance with Section 1804.7.5 showing original ground surface elevations, as-graded ground surface elevations, lot drainage patterns, and the locations and elevations of surface drainage facilities and of the outlets of subsurface drains. As-constructed locations, elevations and details of subsurface drains shall be shown as reported by the soils engineer. Civil engineers shall state that to the best of their knowledge the work within their area of responsibility was done in accordance with the final approved grading plan.

2. A report prepared by the soils engineer retained to provide such services in accordance with Section 1804.7.3, including locations and elevations of field density tests, summaries of field and laboratory tests, other substantiating data, and comments on any changes made during grading and their effect on the recommendations made in the approved soils engineering investigation report. Soils engineers shall submit a statement that, to the best of their knowledge, the work within their area of responsibilities is in accordance with the approved soils engineering report and applicable provisions of this chapter.

3. A report prepared by the engineering geologist retained to provide such services in accordance with Section 1804.7.5, including a final description of the geology of the site and any new information disclosed during the grading and the effect of same on recommendations incorporated in the approved grading plan. Engineering geologists shall submit a statement that, to the best of their

knowledge, the work within their area of responsibility is in accordance with the approved engineering geologist report and applicable provisions of this chapter.

4. The grading contractor shall submit in a form prescribed by the building official a statement of conformance to said as-built plan and the specifications.

1804.7.15.2 Notification of Completion. The permittee shall notify the building official when the grading operation is ready for final inspection. Final approval shall not be given until all work, including installation of all drainage facilities and their protective devices, and all erosion-control measures have been completed in accordance with the final approved grading plan, and the required reports have been submitted.

i. Replace Section 3109.4.4.2 to read as follows:

3109.4.4.2 Construction permit; safety features required. Commencing January 1, 2007, except as provided in Section 3109.4.4.5, whenever a building permit is issued for construction of a new swimming pool or spa, or any building permit is issued for remodeling of an existing pool or spa, at a private, single-family home, it shall be equipped with a minimum of one of the items one through three drowning prevention safety features below. Items four through five drowning prevention safety features may be required if applicable. Option six and seven are allowed only with prior approval by the building official.

1. The pool shall be isolated from access to a home by an enclosure that meets the requirements of Section 3109.4.4.3.

2. The pool shall incorporate removable mesh pool fencing that meets American Society for Testing and Materials (ASTM) Specifications F 2286 standards in conjunction with a gate that is self-closing and self-latching and can accommodate a key lockable device.

3. The pool shall be equipped with an approved safety pool cover that meets all requirements of the ASTM Specifications F 1346.

4. The residence shall be equipped with exit alarms on those doors providing direct access to the pool.

5. All doors providing direct access from the home to the swimming pool shall be equipped with a self-closing, self-latching device with a release mechanism placed no lower than 54 inches (1372 mm) above the floor.

6. Swimming pool alarms that, when placed in pools, will sound upon detection of accidental or unauthorized entrance into the water. These pool alarms shall meet and be independently certified to the ASTM Standard F 2208 "Standards Specification for Pool Alarms" which includes surface motion, pressure, sonar, laser and infrared type alarms. For purposes of this article, "swimming pool alarms" shall not include swimming protection alarm devices designed for individual use, such as an alarm attached to a child that sounds when the child exceeds a certain distance or becomes submerged in water.

j. Add Section 3202.3.1.1 to read as follows:

3202.3.1.1 Special requirements for covered sidewalks. Covered sidewalks may be permitted by the building official only within the urban areas of Cambria, Cayucos, Santa Margarita, San Miguel and Templeton. In those communities, covered sidewalks are subject to the following requirements:

Covering. The permanent covering of a covered sidewalk shall not be less than 8 feet (2438 mm) above grade and shall provide at least 2 feet (610 mm) of horizontal clearance between the permanent covering and the curb line of the abutting streets.

Location of supports. The permanent covering may be supported by on-grade supports installed no closer than 2 feet (610 mm) from the curb line. In areas allowing diagonal parking, any projection on-grade less than 4 feet (1220 mm) from the curb line shall be protected from damage by vehicles in a manner approved by the building official.

Encroachment Permit required. The permit application for a covered sidewalk shall be accompanied by an encroachment permit issued by the County Engineering Department, State of California or other agency having jurisdiction over the public right-of-way.

k. Add Sections 3408.1.1 through 3408.1.4.3 to read as follows:

3408.1.1 Change of occupancy classification based on hazard category. The relative degree of hazard between different occupancy classifications shall be determined in accordance with the category specified in Tables 3408.1.2, 3408.1.2 and 3408.1.4. Such determination shall be the basis for the application of Sections 3408.1.2 through 3408.1.4.3.

3408.1.2 Means of egress, general. Hazard categories in regard to life safety and means of egress shall be in accordance with Table 3408.1.2.

TABLE 3408.1.2
MEANS OF EGRESS HAZARD CATEGORIES

Relative Hazard	Occupancy Classifications
1 (Highest Hazard)	H
2	I-2, I-3, I-4
3	A, E, I-1, M, R-1, R-2, R-4
4	B, F-1, R-3, S-1
5 (Lowest Hazard)	F-2, S-2, U

3408.1.2.1 Means of egress for change to higher hazard category. When a change of occupancy classification is made to a higher hazard category (lower number) as shown in Table 3408.1.2, the means of egress shall comply with the requirements of Chapter 10 of the California Building Code.

3408.1.2.2 Means of egress for change of use to equal or lower hazard category. When a change of occupancy is made to an equal or lesser hazard category (higher number) as shown in Table 3408.1.2, existing elements of the means of egress shall not be reduced below the level established by the code under which the building was constructed for the new occupancy classification. Newly constructed or configured means of egress shall comply with the requirements of Chapter 10 of the California Building Code.

Exception: Any stairway replacing an existing stairway within a space where the pitch or slope cannot be reduced because of existing construction shall not be required to comply with the maximum riser height and minimum tread depth requirements.

3408.1.3 Heights and areas. Hazard categories in regard to height and area shall be in accordance with Table 3408.1.3.

TABLE 3408.1.3
HEIGHTS AND AREAS HAZARD CATEGORIES

Relative Hazard	Occupancy Classifications
1 (Highest Hazard)	H
2	A-1, A-2, A-3, A-4, I,R-1, R-2, R-4
3	E, F-1, S-1, M
4 (Lowest Hazard)	B, F-2, S-2, A-5, R-3, U

3408.1.3.1 Height and area change to higher hazard category. When a change of occupancy is made to a higher category as shown in Table 3408.1.3, heights and areas of buildings and structures shall comply with the requirements of Chapter 5 of the California Building Code for the new occupancy classification.

3408.1.3.2 Height and area change to equal or lesser category. When a change of occupancy classification is made to an equal or lesser hazard category as shown in Table 3408.1.3, the height and area of the existing building shall be deemed acceptable.

3408.1.3.3 Fire barriers. When a change of occupancy classification is made to a higher hazard category as shown in Table 3408.1.3, fire barriers in separated mixed-use buildings shall comply with the fire resistance requirements of the California Building Code.

Exception: Where the fire barriers are required to have a 1-hour fire-resistance rating, existing wood lath and plaster in good condition or existing ½-inch-thick (12.7 mm) gypsum wallboard shall be permitted on the side of the fire barrier not subject to the occupancy classification change.

3408.1.4 Exterior wall fire-resistance ratings. Hazard categories in regard to fire-resistance ratings of exterior walls shall be in accordance with Table 3408.1.4.

TABLE 3408.1.4
EXPOSURE OF EXTERIOR WALLS HAZARD CATEGORIES

Relative Hazard	Occupancy Classifications
1 (Highest Hazard)	H
2	F-1, M, S-1
3	A, B, E, I, R
4 (Lowest Hazard)	F-2, S-2, U

3408.1.4.1 Exterior wall rating for change of occupancy classification to a higher hazard category. When a change of occupancy classification is made to a higher hazard category as shown in Table 3408.1.4, exterior walls shall have a fire-resistance and exterior opening protectives as required by the California Building Code. This provision shall not apply to walls at right angles to the property line.

Exception: A 2-hour fire-resistance rating shall be allowed where the building does not exceed three stories in height and is classified as one of the following groups: A-2 and A-3 with an occupant load of less than 300, B, F, M, or S.

3408.1.4.2 Exterior wall rating for change of occupancy classification to an equal or lesser hazard category. When a change of occupancy classification is made to an equal or lesser hazard category as shown in Table 3408.1.4, existing exterior walls, including openings, shall be accepted.

3408.1.4.3 Opening protectives. Openings in exterior walls shall be protected as required by the California Building Code. Where openings are required to be protected because of distance from the property line, the sum of the area of such openings shall not exceed 50 percent of the total area of the wall in each story.

Exceptions:
1. Where the California Building Code permits openings in excess of 50 percent.
2. Protected openings shall not be required in buildings of Group R occupancy that do not exceed three stories in height and that are located not less than 3 feet (914 mm) from the property line.
3. Where exterior opening protectives are required, an automatic sprinkler system throughout may be substituted for opening protection.
4. Exterior opening protectives are not required when the change of occupancy group is to an equal or lower hazard classification in accordance with Table 3408.1.4.Add Sections 3406.1.1 through 3406.1.4.3 to read as follows:

3406.1.1 Change of occupancy classification based on hazard category. The relative degree of hazard between different occupancy classifications shall be determined in accordance with the category specified in Tables 3406.1.2, 3406.1.2 and 3406.1.4. Such determination shall be the basis for the application of Sections 3406.1.2 through 3406.1.4.3.

3406.1.2 Means of egress, general. Hazard categories in regard to life safety and means of egress shall be in accordance with Table 3406.1.2.

TABLE 3406.1.2
MEANS OF EGRESS HAZARD CATEGORIES

Relative Hazard	Occupancy Classifications
1 (Highest Hazard)	H
2	I-2, I-3, I-4
3	A, E, I-1, M, R-1, R-2, R-4
4	B, F-1, R-3, S-1
5 (Lowest Hazard)	F-2, S-2, U

3406.1.2.1 Means of egress for change to higher hazard category. When a change of occupancy classification is made to a higher hazard category (lower number) as shown in Table 3406.1.2, the means of egress shall comply with the requirements of Chapter 10 of the California Building Code.

3406.1.2.2 Means of egress for change of use to equal or lower hazard category. When a change of occupancy is made to an equal or lesser hazard category (higher number) as shown in Table 3406.1.2, existing elements of the means of egress shall not be reduced below the level established by the code under which the building was constructed for the new occupancy classification. Newly constructed or configured means of egress shall comply with the requirements of Chapter 10 of the California Building Code.

Exception: Any stairway replacing an existing stairway within a space where the pitch or slope cannot be reduced because of existing construction shall not be required to comply with the maximum riser height and minimum tread depth requirements.

3406.1.3 Heights and areas. Hazard categories in regard to height and area shall be in accordance with Table 3406.1.3.

TABLE 3406.1.3
HEIGHTS AND AREAS HAZARD CATEGORIES

Relative Hazard	Occupancy Classifications
1 (Highest Hazard)	H
2	A-1, A-2, A-3, A-4, I,R-1, R-2, R-4
3	E, F-1, S-1, M
4 (Lowest Hazard)	B, F-2, S-2, A-5, R-3, U

3406.1.3.1 Height and area change to higher hazard category. When a change of occupancy is made to a higher category as shown in Table 3406.1.3, heights and areas of buildings and structures shall comply with the requirements of Chapter 5 of the California Building Code for the new occupancy classification.

3406.1.3.2 Height and area change to equal or lesser category. When a change of occupancy classification is made to an equal or lesser hazard category as shown in Table 3406.1.3, the height and area of the existing building shall be deemed acceptable.

3406.1.3.3 Fire barriers. When a change of occupancy classification is made to a higher hazard category as shown in Table 3406.1.3, fire barriers in separated mixed-use buildings shall comply with the fire resistance requirements of the California Building Code.

Exception: Where the fire barriers are required to have a 1-hour fire-resistance rating, existing wood lath and plaster in good condition or existing ½-inch-thick (12.7 mm) gypsum wallboard shall be permitted on the side of the fire barrier not subject to the occupancy classification change.

3406.1.4 Exterior wall fire-resistance ratings. Hazard categories in regard to fire-resistance ratings of exterior walls shall be in accordance with Table 3406.1.4.

TABLE 3406.1.4
EXPOSURE OF EXTERIOR WALLS HAZARD CATEGORIES

Relative Hazard	Occupancy Classifications
1 (Highest Hazard)	H
2	F-1, M, S-1
3	A, B, E, I, R
4 (Lowest Hazard)	F-2, S-2, U

3406.1.4.1 Exterior wall rating for change of occupancy classification to a higher hazard category. When a change of occupancy classification is made to a higher hazard category as shown in Table 3406.1.4, exterior walls shall have a fire-resistance and exterior opening protectives as required by the California Building Code. This provision shall not apply to walls at right angles to the property line.

Exception: A 2-hour fire-resistance rating shall be allowed where the building does not exceed three stories in height and is classified as one of the following groups: A-2 and A-3 with an occupant load of less than 300, B, F, M, or S.

3406.1.4.2 Exterior wall rating for change of occupancy classification to an equal or lesser hazard category. When a change of occupancy classification is made to an equal or lesser hazard category as shown in Table 3406.1.4, existing exterior walls, including openings, shall be accepted.

3406.1.4.3 Opening protectives. Openings in exterior walls shall be protected as required by the California Building Code. Where openings are required to be protected because of distance from the property line, the sum of the area of such openings shall not exceed 50 percent of the total area of the wall in each story.

Exceptions:

1. Where the California Building Code permits openings in excess of 50 percent.
2. Protected openings shall not be required in buildings of Group R occupancy that do not exceed three stories in height and that are located not less than 3 feet (914 mm) from the property line.
3. Where exterior opening protectives are required, an automatic sprinkler system throughout may be substituted for opening protection.
4. Exterior opening protectives are not required when the change of occupancy group is to an equal or lower hazard classification in accordance with Table 3406.1.4.

l. Add Appendix Section H101.0 to read as follows:

H101.0 Signs. Compliance with other codes. The construction or installation of all signs shall comply with all applicable provisions of the Land Use Ordinance, Title 22 of the San Luis Obispo County Code, or the Coastal Zone Land Use Ordinance, Title 23 of the San Luis Obispo County Code, where applicable.

19.03.020 - Modifications of the California Residential Code. The California Residential Code adopted in Section 19.01.040 is modified, amended and/or supplemented as follows:

a. Delete Appendix D, E, F, G, I, J, K, L, M, N, O, P, Q and R

Adopt Appendix A - SIZING AND CAPACITIES OF GAS PIPING
Adopt Appendix B -SIZING OF VENTING SYSTEMS SERVING APPLIANCES EQUIPPED WITH DRAFT HOODS, CATEGORY I APPLIANCES, AND APPLIANCES LISTED FOR USE WITH TYPE B VENTS
Adopt Appendix C - EXIT TERMINALS OF MECHANICAL DRAFT AND DIRECT VENT VENTING SYSTEMS
Adopt Appendix H - PATIO COVERS

b. Remove the exception to R313.1

c. Remove the exception to R313.2

d. Amend Section 313.2 to read as follows:

313.2 Unless otherwise established by the local Fire Marshall or other applicable code, an approved automatic fire sprinkler system shall be installed: per the following Tables:

See **19.03.010 (e)** Tables 903.1 and 903.2

e. Add Section R327.11 to read as follows:

SECTION R327.11 WAIVER OF REQUIREMENTS

R327.11.1 The Building Official may waive the requirements of this chapter, in whole or in part, for specific construction projects on a case by case basis within a Fire Hazard Severity Zone when such waiver is approved by the Fire Marshal, based upon site conditions which justify a reduction in fire resistance.

f. Amend Section R319.1 to read;

Address Identification. New and existing buildings shall have approved address numbers, building numbers or approved building identification placed in a position that is plainly legible and visible from the street or road fronting the property. Where access is by means of a private road and the building cannot be viewed by and the building cannot be viewed from the public way, a monument, pole or other sign or means shall be used to identify the structure. Address numbers shall be maintained. These numbers shall contrast with their background. Address numbers shall be Arabic numerals or alphabet letters. Numbers shall be a minimum of: Residential 6 inches, Commercial 8 inches, and Industrial 10 inches high with a minimum stroke width of 0.5 inch (12.7mm).

g. Add Section R327.11 to read as follows:

SECTION 711A WAIVER OF REQUIREMENTS

711A.1 The Building Official may waive the requirements of this chapter, in whole or in part, for specific construction projects on a case by case basis within a Fire Hazard Severity Zone when such waiver is approved by the Fire Marshal, based upon site conditions which justify a reduction in fire resistance. A Request for Code Modification Form shall be completed and the applicable fee paid for such waiver.

h. Add Section R806.4.5 to read;

R806.4.5 Unvented ceiling joist/roof rafter spaces. Enclosed rafter spaces formed where ceilings are applied directly to the underside of roof rafters shall be permitted to be unvented if a whole house ventilation system is installed per the current California Energy Code and the system is controlled by occupancy sensor(s) placed in the core area of the house. The fan shall be placed in the highest location possible in the core area(s).

19.07.010 - Modifications of the California Plumbing Code. The California Plumbing Code adopted in Section 19.01.040 is modified, amended and/or supplemented as follows:

a. Delete Section 103 and replace with 19.02.010 of this code.

b. Amend Section 603.0 to read as follows:

603.0 Cross-Connection Control. Cross-connection control shall be provided in accordance with the provisions of this chapter and Chapter 8.30 of the San Luis Obispo County Code (Cross-Connections Control and Inspections).

No person shall install any water-operated equipment or mechanism, or use any water-treating chemical or substance, if it is found that such equipment, mechanism, chemical or substance may cause pollution or contamination of the domestic water supply. Such equipment or mechanism may be permitted only with an approved backflow prevention device or assembly.

19.07.015 – Definitions.

a. **Alternate Sewage treatment system:** An on-site treatment system that includes components different from those used in a conventional septic tank and drain field system. An alternative system is used to achieve acceptable dispersal/discharge of

wastewater where conventional systems may not be capable of meeting established performance requirements to protect public health and water resources. (e.g., at sites where high ground water, low permeability soils, shallow soils, or other conditions limit the infiltration and dispersal of wastewater). Components that might be used in alternative systems include mounds and pressure and drip distribution systems.

b. **Bedrock:** Any consolidated rock, either weathered or not, which usually underlies alluvium, collovium, topsoil, residual soil or fill. Bedrock would include sedimentary rocks, metamorphic rock and igneous rocks.

c. **Community Sewage Disposal System:** A residential wastewater treatment system for more than five units or more than five parcels; or commercial, industrial or institutional system that treats 2,500 gallons or more of domestic/sanitary wastewater per day (peak daily flow.)

d. **Conventional Treatment System:** A wastewater treatment system consisting of a septic tank and subsurface wastewater infiltration system.

e. **Engineered Design:** An onsite or cluster system that is designed to meet specific performance requirements for a particular site as certified by a licensed professional engineer or other qualified and licensed or certified person.

f. **Groundwater:** Water located below the land surface in the saturated zone of the soil or rock. Groundwater includes perched water tables, shallow water tables, and zones that are seasonally or permanently saturated.

g. **Impervious Layer:** Soil that has a percolation rate slower than one hundred twenty minutes to the inch, or having a clay content of sixty percent or greater.

h. **Maintenance:** The work related to the upkeep of the septic system. Examples include but are not limited to: pumping of the septic tank, any installation, repair or replacement of septic tank baffles, risers, ells, tops, access ports, pumps or blowers.

i. **On-Site Wastewater Treatment System (OWTS):** A system relying on natural processes and/or mechanical components that is used to collect, treat, and disperse/discharge wastewater from single dwellings or buildings.

j. **Operating Permit:** A renewable and revocable permit to operate and maintain an onsite or cluster treatment system in compliance with specific operational or performance requirements.

k. **Qualified Contractor:** Is any contractor holding a license in good standing from the Contractors State License Board for Plumbing (C-36), Sanitation System (C-42), or General Engineering Contractor (A). A contractor holding a license as General Building Contractor (B) shall be considered a qualified contractor when constructing, modifying, or abandoning an on-site sewage treatment system as part of a larger construction project involving a new structure or major addition to an existing structure.

l. **Qualified Inspector:** Is any Registered Environmental Health Specialist, Registered Civil Engineer, Contractor holding a license classification from the California Contractors State License Board for Plumbing (C-36), Sanitation Systems (C-42), or General

Engineering Contractor (A), or an individual who has satisfactorily completed training in an on-site sewage system inspection and certification program approved by the building official.

m. **Qualified Professional:** Any individual who possesses a current Registered Environmental Health Specialist (REHS) certificate or is currently licensed as a professional engineer or professional geologist.

n. **Qualified Service Provider:** Any person capable of operating, monitoring and maintaining an OWTS consistent with the requirements of this section and the Operation and Maintenance manual or capable of inspecting an OWTS in accordance with this section, or has a current certificate from an approved training program, or is approved by the building official.

o. **Registered Environmental Health Specialist (REHS):** An Environmental Health Specialist currently registered by the State of California.

p. **Registered Pumper:** Is any person or firm that pumps and or hauls septage and has been issued a registration by the director of Environmental Health.

q. **Reservoir:** A pond, lake, basin, or other space, either natural or created, in whole or in part, by the building of engineered structures other than sealed storage tanks constructed of impervious metal or synthetic materials, which is used for storage, regulation, and control of water, for recreation, power, flood control or drinking. For the purposes of this chapter, the term reservoir does not include small and shallow structures or basins for the temporary detention of storm water runoff from on-site roof drains and paved areas, provided there is no flow at any time between the structure or basin and any sewage disposal system.

r. **Supplemental Treatment System (Also referred to as Enhanced Treatment Systems):** An onsite sewage treatment system that utilizes engineered design and / or technology to treat effluent and to reduce one or more constituents of concern in wastewater.

s. **Surface Waters:** A concentration of freshwater or seawater, the surface of which is in direct contact with the atmosphere, including reservoirs and watercourses as defined in this section, as well as wetlands and ocean bays.

t. **Watercourse:** A natural or artificial channel for passage of water. There must be a stream usually flowing in a particular direction (though it need not flow continuously) usually discharging into some stream or body of water.

19.07.020 - Sewage Disposal Systems. The design and installation of sewage disposal systems within the unincorporated areas of San Luis Obispo County are subject to the provisions of the following sections:

19.07.022 **Private Sewage Disposal Systems**
19.07.023 **Alternative and Supplemental Treatment Systems**
19.07.024 **Community Sewage Disposal Systems**

19.07.022 - Private Sewage Disposal Systems. The use of a private, on-site sewage disposal system is allowed only within the rural areas of the county and within urban and village areas where no community sewage collection, treatment and disposal system exists. Private sewage disposal systems shall be designed and constructed as provided by this section, in addition to satisfying all applicable requirements of the California Plumbing Code. In the event of any conflict between the provisions of this section and the California Plumbing Code, the most restrictive shall govern.

a. **Legislative findings.** These regulations are enacted in part to implement the requirements of the "Water Quality Control Plan, Central Coastal Basin", adopted by the California Regional Water Quality Control Board. To the extent that these regulations change applicable provisions of the California Health and Safety Code and California Code of Regulations as they would otherwise apply to local construction, the Board of Supervisors finds that the changes herein are necessary because of local geological and topographic conditions which change applicable provisions of the California Health and Safety Code and California Code of Regulations as they would otherwise apply to local construction, the Board of Supervisors finds that the changes herein are necessary because of local geological and topographic conditions which involve limitations on the capability of soils in the unincorporated areas of San Luis Obispo County to effectively handle sewage effluent disposal from private sewage disposal systems. Such limitations include high groundwater, soils with poor percolation capability and steep slopes.

b. **General requirements.**

1. **Percolation tests.** Percolation tests may be required by the building official pursuant to Appendix B of this section.

2. **Minimum site area with well.** . As required by the Land Use Ordinance, Title 22 of this code, or the Coastal Zone Land Use Ordinance, Title 23 of this code. An existing parcel that contains a water well may be approved for a private sewage disposal system only if the parcel is one acre or larger. A parcel smaller than one acre may use a private sewage disposal system only where the well serving the parcel is a public water supply or is located on another parcel that is one acre or larger. The minimum site area for a new parcel where a well and septic system are both proposed is determined by the Land Use Ordinance, Title 22 of this code, and the Coastal Zone Land Use Ordinance, Title 23 of this code.

3. **Minimum site area in reservoir watershed**. Within any domestic reservoir watershed, all private sewage disposal systems shall be located on individual parcels of at least 2-1/2 acres or within subdivisions with a maximum density of 2-1/2 acres or more per dwelling unit. No land within a horizontal distance of 200 feet from a reservoir, as determined by the spillway elevation, shall qualify for computing parcel size or density, or for septic system sitting.

c. **Septic tank and leach area systems.** On-site sewage disposal systems that utilize a buried tank for the processing of solids, and leaching areas, trenches or seepage pits for the disposal of liquid waste through soil infiltration shall be located, designed and constructed in accordance with all of the following standards:

1. **Minimum site characteristics.** Septic tank and leach area systems shall be used only where the proposed site can maintain subsurface disposal, and satisfy the following standards on a continuous basis, unless an exception is approved as set forth in subsection d of this section.

   i. **Subsurface geology.** The proposed site for a soil absorption disposal area shall be free from soils or formations containing continuous channels, cracks or fractures, unless a setback distance of at least 250 feet to any domestic water supply well or surface water is assured.

   ii. **Site flooding.** No sewage disposal system shall be allowed within an area subject to inundation by a 10-year flood.

   iii. **Minimum percolation required.** A percolation rate from 0 to 30 minutes per inch of fall is sufficient to permit the use of leaching systems. Such systems shall not be used where percolation rates are slower than 120 minutes/inch unless the parcel is at least 2 acres. Such systems shall not be used where soil percolation rates are slower than 60 minutes/inch unless the effluent application rate is 0.1 gallon per day/square foot or less, using a minimum flow rate of 375 gpd/dwelling unit, or as provided by Appendix K of the California Plumbing Code for commercial uses. Percolation rates of more than 60 minutes per inch of fall may be approved only where the system is designed and certified to have been installed as designed by the design engineer.

   iv. **Site slope.** Septic tanks or leaching systems installed on slopes of 20 percent or more shall be designed and installation certified by a registered engineer. Design shall minimize grading disruption associated with access for installation and maintenance. No soil absorption sewage disposal area shall be located where the natural slope is 30 percent or greater.

   v. **Separation from impermeable strata.** A minimum distance of 10 feet shall be maintained from the bottom of leaching systems to impermeable strata. This distance shall be verified by test borings pursuant to the California Plumbing Code where required by the building official.

   vi. **Groundwater separation.** Depth from the bottom of the leach area to usable groundwater (including usable perched groundwater) shall be as follows, based upon the percolation rate found at the site:

Percolation rate, Minutes per inch	Minimum distance to groundwater in feet
Less than 1 min./in.	50 feet*
-4	20 feet*
5-29	8 feet
30+	5 feet

   * Unless a minimum horizontal separation of 250 feet between the disposal area and any domestic water supply well or surface water is assured, in which case minimum groundwater separation shall be 20 feet when the

percolation rate is less than one minute/inch, and eight feet when the percolation rate is one to four minutes/inch.

The building official may require a piezometer test or other appropriate documentation to verify the groundwater separation required by this section.

2. **System location.** A private sewage disposal system shall be located on the parcel it serves. Soil absorption disposal systems, including but not limited to leach areas and seepage pits, shall be located in accordance with the setbacks in the following table, except that where disposal system location is proposed with less groundwater separation than required by subsections b(1)(vi) or b(3)(ii) of this section, the increased setbacks required by those subsections shall be provided.

Setback from	**Distance in Feet**
Domestic water supply wells in unconfined aquifer.	100
Watercourse where geologic conditions permit water migration.	100
Natural spring or any part of man-made spring.	100
Reservoir, spillway elevation.	200
Public water supply wells.	100

3. **Seepage pit standards.** The following standards apply only to seepage pit disposal facilities, in addition to all other applicable standards of this section.

i. **Soil particle size.** Seepage pits shall be used only where soils or formations at the pit location contain less than 60 percent clay (a soil particle less than 2 microns in size) in the percolation zone used for seepage calculation, unless the parcel is at least two acres.

ii. **Groundwater separation.** Seepage pits shall be used only where distances between pit bottom and useable groundwater (including perched groundwater) is equal to or greater than the following minimum separations, based upon the soil type found at the site as follows:

Soil Type	**Minimum Distance to Groundwater in feet**
Gravels	50 feet*
Gravels with few fines	20 feet*
Other	10 feet

* Unless a minimum horizontal separation of 250 feet between the disposal area and any domestic water supply well or surface water is assured, in which case minimum groundwater separation shall be 20 feet when the soil type is gravels and 10 feet when the soil type is gravels with few fines.

iii. All Seepage pit disposal systems shall be designed and inspected by a licensed engineer.

The building official may require a piezometer test or other appropriate documentation to verify the groundwater separation required by this section.

4. **System design and sizing.**

i. **Replacement area required.** Individual systems on new land divisions, and commercial, institutional, and sanitary industrial systems shall be designed and constructed to either reserve sufficient site area for dual leach fields (100 percent replacement area), or construct the dual leach fields with a diverter valve at the time of initial septic system installation. Installation of dual leachfields will be required if site access for installation of the expansion area could be limited after initial site development.

ii. **Non-residential systems.** Commercial, institutional, or sanitary industrial systems shall be designed based upon the daily peak flow estimate for the proposed use.

iii. **Residential systems**. A minimum leaching area of 125 square feet per bedroom shall be provided for sewage disposal systems serving residential uses.

5. **Replacement of failed private sewage disposal systems**. Where an existing private sewage disposal system has failed and a replaced system cannot be installed to meet the criteria of this section, the building official may approve a replacement system that meets all of the following minimum standards and is designed to satisfy as many of the other requirements of this section as possible:
   i. The system is designed by a registered engineer.
   ii. The proposed system is approved by the County Health Department.
   iii. The installation of the approved system is inspected and certified to be installed as designed by the design engineer

d. **Use of non-standard engineered systems.** Systems proposed under Section K1(J), Appendix K of the California Plumbing Code, including mound and evapotranspiration systems shall be designed as provided by the "Water Quality Control Plan, Central Coastal Basin", adopted and as amended by the California Regional Water Quality Control Board, by an engineer or sanitarian registered by the State of California competent in sanitary engineering, and shall be approved by the building official and the Regional Water Quality Control Board.

e. **Relief from standards.** Any applicant for a permit to install, repair or replace a private sewage disposal system who is aggrieved by the administration of the requirements of this section by the building official may appeal the matter to the Board of Appeals as provided in Section 19.02.020. In cases where an exception is requested to any provision of this section that prohibits use of a private sewage disposal system under specified conditions, no exception granted by the Board of Appeals shall be effective unless the California Regional Water Quality Control Board has also approved an "Exemption to Basin Plan Prohibitions" for the proposed exception.

19.07.023 - Alternative and Supplemental Treatment Systems.

a. **Alternative Systems**. An on-site treatment system that includes components different from those used in a conventional septic tank and drain field system. An alternative system is used to achieve acceptable dispersal/discharge of wastewater where conventional systems may not be capable of meeting established performance requirements to protect public health and water resources. (e.g., at sites where high

ground water, low permeability soils, shallow soils, or other conditions limit the infiltration and dispersal of wastewater). Components that might be used in alternative systems include mounds and pressure and drip distribution systems.

b. **Supplemental Treatment System.** An onsite sewage treatment system that utilizes engineered design and/or technology to treat effluent and reduce one or more constituents of concern in wastewater. Supplemental treatment systems include, sand filters, aerobic treatment units, and disinfection devices. A supplemental treatment system shall be required in each of the following locations:

1. On a site where geologic conditions permit water migration.

2. In any area determined by the Regional Water Quality Control Board, County Environmental Health or the Board of Supervisors to be experiencing surface or groundwater degradation caused in part by on-site wastewater treatment systems.

c. **Permit Required for Alternative and Supplemental Treatment Systems**. Alternative systems, systems providing supplemental treatment and systems in specific areas of concern as identified by the Board of Supervisors or the Regional Water Quality Control Board (RWQCB), shall require an operating permit, which shall be issued by the building official subsequent to the final inspection approval of the system. All on-site wastewater treatment systems requiring operating permits shall be operated, maintained and monitored pursuant to the requirements of this section and conditions of the operating permit. The operating permit shall be renewed every year. A report containing all the information specified in the operating permit shall be submitted to the building official annually. The building official may suspend or revoke an operating permit for failure to comply with any requirement of the permit. If a permit is suspended or revoked, operation of the system shall cease until the suspension or revocation is lifted or a new permit issued. Upon change of ownership, the operating permit shall be terminated and the new owner shall obtain an operating permit within sixty days.

d. **Recorded Notice Required for Alternative and Supplemental Treatment Systems.** Prior to final inspection approval of an on-site system with alternative components or supplemental treatment, a “Notice of Installation of an Alternative or Supplemental On-Site Wastewater Treatment System” shall be recorded with the San Luis Obispo County Clerk-Recorder’s office and shall be placed with the deed of record. This notice shall inform future owners, heirs, executors, administrators or successors that the subject property is served by an alternative or supplemental treatment system and shall bind current and future owners to maintain an operating permit and comply with all established monitoring, reporting, inspection, and maintenance requirements of that operating permit.

e. **Operation and Maintenance Manual Required for Alternative and Supplemental Treatment Systems.** The owner of a site on which a new Alternative or Supplemental OWTS is installed or an existing OWTS is replaced or significantly repaired with an Alternative or Supplemental treatment system, shall have an Operation and Maintenance manual prepared by a Qualified Professional. The Operation and Maintenance manual shall include, at a minimum:

1. The name, address, telephone number, business and professional license of the OWTS designer;

2. The name, address, telephone number, business and professional license, where applicable, of the OWTS installer;

3. The name, address, and telephone number of the Qualified Service Provider, where applicable;

4. Instructions for the proper operation and maintenance and a protocol for the assessing the performance of the OWTS;

5. A copy of the as-built (accurate) plans for the OWTS and a inspection report by the Qualified Professional that the system complies with all applicable regulations;

6. The design flow and performance requirements for the OWTS;

7. A list of substances that could inhibit performance if discharged into the OWTS, including any biocide and;

8. A list of substances that could cause a condition of pollution or nuisance if discharged to the OWTS, including but not limited to pharmaceutical drugs and water softener regeneration brines.

f. Alternative Systems. The following general requirements apply to all alternative systems.

1. All OWTS systems in which pumps are used to move effluent shall be equipped with a visual and audible alarm. Telemetric alarm systems which alert the owner or service provider in the event of pump failure are also recommended. All pump systems shall, at a minimum, provide for storage in the pump chamber during a 24-hour power outage or pump failure and shall not allow an emergency overflow discharge. All pumped systems shall be designed by a qualified professional.

2. The building official and the RWQCB shall adopt and periodically update design standards for alternative systems.

3. The owner shall monitor and maintain the system under the direction of a Qualified Service Provider, as required by the Operation and Maintenance manual.

4. Proposed operation, maintenance and monitoring specifications shall be submitted along with proposed plans and permit application for alternative systems.

5. The property owner shall submit a County of San Luis Obispo Septic Tank Inspection Report, prepared by the Qualified Service Provider, a minimum of once a year. The report shall include: The results of the annual inspection, a check of the alarm system, and any other requirements specified by the building

official. Reports shall be submitted within 30 days of the completion of the inspection.

6. Alternative systems shall be designed in conformance with currently adopted state guidelines or other guidelines jointly approved by the Regional Water Quality Control Board and the building official. The county shall inspect each system during the construction phase as described in this section. In addition, the Qualified Professional who designed the system shall submit to the building official a letter indicating the Alternative system has been constructed per the approved plans.

g. Supplemental Treatment Systems. Supplemental treatment systems shall comply with the following:

1. The building official shall review and approve the method of supplemental treatment proposed prior to construction. Treatment systems shall be listed by an independent testing agency, such as IAPMO, ANSI, NSF, or similar and shall conform to the standards adopted by the county.

2. A supplemental treatment system shall be capable of removing a minimum of 85% of Total Suspended Solids (TSS), Biochemical Oxygen Demand (BOD), and Total Nitrogen (TN). In addition, the residual concentration of TSS and BOD, shall not exceed 30 mg/L. and TN shall not exceed 15 Mg/L. The listing agency shall certify that the system can continually meet these performance standards over a thirty day period.

3. Operation, maintenance and monitoring specifications shall be provided for review and approval for any supplemental treatment system. The manufacturer's maintenance requirements shall be incorporated into the mandatory conditions of the operating permit.

4. The property owner shall comply with all maintenance requirements of the manufacturer and shall ensure that a Qualified Service Provider, Qualified Professional or manufacturer's representative conducts a visual and operational inspection of the system a minimum of once a year or more frequently if required by the manufacturer to determine if the system is functioning properly.

5. The property owner shall submit a report, prepared by a Qualified Professional, or Manufacturer's Representative, a minimum of once a year, and within thirty days of inspection. The report shall include: verification that all manufacturer's maintenance requirements have been completed, the results of all inspections, analysis of the wastewater from the inspection ports for TSS, BOD, and TN, a concluding statement that the system is functioning properly, and if not, what needs to be repaired or replaced and when it should be completed.

19.07.024 - Community Sewage Disposal Systems. Community sewage disposal systems may be reviewed and approved by the county Health and Engineering Departments only when a proposed system is designed and constructed as follows, and is approved by the California Regional Water Quality Control Board.

a. Public agency operation required. Sewerage facilities shall be operated by a public agency unless the County Engineer or the Regional Water Quality Control Board finds that an existing agency is unavailable and formation of a new agency is unreasonable. If such finding is made, a private entity shall be established with adequate financial, legal and institutional resources to assume responsibility for waste discharges.

b. Minimum number of users served. A community sewage disposal system may be approved only where at least 50 dwelling units will be served by the proposed system, unless fewer hookups are authorized by the County Engineer.

c. Disposal system design and performance. Community sewage disposal systems shall be designed and shall discharge effluent of a quality pursuant to the provisions of the "Water Quality Control Plan, Central Coastal Basin", adopted by the California Regional Water Quality Control Board.

19.07.025 - Appendices.

APPENDIX A. ON SITE WASTEWATER TREATMENT SYSTEM REQUIREMENTS FOR SECONDARY DWELLING UNITS ON PARCELS LESS THAN TWO ACRES IN SIZE

The Regional Water Quality Control Board criteria for a new septic system specifies a maximum density of one residence per acre unless soil and other constraints for sewage disposal are found to be "particularly favorable". Septic system density may then be increased to one residence per half acre.

a. Separate treatment systems shall be used for each dwelling. An application, plans and a site evaluation report meeting the requirements of this title shall be submitted for each system.

b. All other technical requirements of this title, and Titles 22 and 23 shall be met.

APPENDIX B. PERCOLATION TEST AND BORING PROCEDURES

Percolation and boring tests shall be performed by or under the supervision of a licensed qualified engineer.

a. Percolation Test Procedure.

1. Test hole openings shall have an 8 12 inch diameter, or be 7 11 inches on the side, if square. The walls should be vertical.

2. The bottom of the test hole should correspond with the bottom of the proposed trench and shall be covered with 2 inches of gravel.

3. Presoak the test hole overnight, prior to testing. For sandy soils, presoak until water level stabilizes, see b(1) below.

4. The height of the water shall be re filled to initial height of between 8 and 10 inches over the gravel after each reading.

5. The surface of the hole shall be uncompacted: any cobbles protruding from the surface shall be left in place.

b. Measurements.

1. In sandy soils in which two consecutive measurements show that six inches of water seeps away in less than 25 minutes, the test shall be run for an additional hour with measurements taken every ten minutes, making sure to re-fill the hole after each measurement. The drop that occurs during the final ten minutes shall be used to calculate the percolation rate. Field data shall show the two 25 minute readings, along with the six 10 minute readings.

2. In all other than sandy soils, pre soak (fill) and wait overnight. If necessary, refill the hole the next day. Obtain at least 12 measurements per hole over at least 6 hours with a precision of at least 0.25 inch. Intervals between readings shall be approximately thirty minutes. The drop that occurs during the last 30 minutes is used to calculate the percolation rate. Field data shall show the twelve 30 minute readings.

c. Testing Procedure for Dry Wells (Seepage Pits) Performance Test.

1. The hole diameter shall be between 6 and 8 inches. The test depth shall be equal to the depth of the proposed dry well, plus sufficient depth to prove proper setback to groundwater and impervious material.

2. Carefully fill the hole with clear water to a maximum depth of 4 feet below the surface of the ground, or if cuts are anticipated, to the depth of the assumed inlet.

3. All holes shall be pre soaked for 24 hours unless the site consists of sandy soils containing little or no clay. In sandy soils where the water on two consecutive readings seeps away faster than half the wetted depth in 25 minutes or less, re fill the hole with water, and pre soak for an additional two hours. After the two hour pre soak, the test may then be run. The time interval between measurements shall be taken at ten minutes and the test run for one hour. Refill to original depth after each reading.

4. For all other soils, the percolation rate measurement shall be made on the day following pre soak as described above. After 24 hours have elapsed, refill the hole to the proposed inlet depth. The fall of water should be measured every half hour over a five hour period. Refill the hole after each half-hour reading. During the last or the sixth hour, do not refill the hole after the half hour reading. Be sure to check the total hole depth every half hour as well to see if any caving has occurred.

5. Readings will be in min/inch just like they are for leachlines. Rates are set by the Regional Water Quality Control Board. Utilize 0.3 gallons per square foot per day for disposal rate, and 375 gallons per day average daily flow per household, up to four bedrooms.

6. Seepage pits will not be allowed when percolation rates are slower than 55 minutes per inch.

d. **Exploratory Borings**. An exploratory boring is a hole excavated or drilled in the area where the disposal field is proposed in order to determine the type of soil, moisture content, and depth of the seasonal high water table or impervious material.

1. All borings must extend to a minimum depth of ten feet below the bottom of the proposed disposal system so as to determine the depth of the water table, bedrock, and all impervious material within ten feet of the bottom of the disposal system. Minimum depth of any boring is 15 feet or stated refusal.

2. When percolation results are faster than 1 minute an inch, the exploratory boring shall be drilled to a depth of 50 feet below the depth of the proposed disposal system. For percolation results between 1-4 minutes an inch, the boring shall be drilled to a depth of 20 feet below the proposed disposal system.

3. A log of the soil profile shall be conducted and included as part of the written percolation test.

4. All borings used to check for groundwater shall stay open a minimum of 24 hours prior to the final reading and groundwater check. Water levels are to be recorded at the highest discovered level following the 24 hour period. If any groundwater is encountered that may affect the subsurface sewage disposal, an evaluation by a qualified professional, shall be given in the conclusion section of the percolation report.
5. Measurements of depth to seasonal high groundwater shall be conducted from November 1st to April 1st unless otherwise specified by the building official.

6. In areas with seasonal high groundwater, a groundwater level monitoring well shall be installed to a minimum depth of ten feet in the area of a proposed wastewater dispersal system. Groundwater monitoring wells shall be a minimum of 3 inch PVC pipe and shall have a removable cap. The top 18 inches around the pipe shall be sealed with Bentonite or other suitable sealer to prevent surface pollutants from intruding into the well. Below 18 inches, the pipe shall be perforated. Monitoring wells shall not be deeper than 15 feet, unless required by the building official. If an impermeable layer is present at a depth of less than ten feet below the ground surface, the depth of the groundwater level monitoring well shall be decreased to the depth of the impermeable layer..

19.07.027 – Septic Tank Abandonment.

a. Every cesspool or Septic Tank that has been abandoned or has been discontinued otherwise from use, or which no waste or soil pipe from a plumbing fixture is connected, shall have the sewage removed therefrom and be completely filled with earth, sand, gravel, concrete or other approved material.

Exception: Septic tanks may be re-used as rainwater storage cisterns if all the following conditions are met.

1. The applicant shall obtain a system abandonment permit from County Building Department. The permit application shall specify the intended use of the septic tank.
2. The activities related to abandoning the onsite sewage treatment and disposal system shall not create a sanitary nuisance.
3. The septic tank shall be disconnected from the drain field and from the the building sewer pipe.
4. All work to disconnect, clean and sanitize the septic tank shall be conducted by a registered septic tank contractor or a state-licensed Plumber or by the owner of the owner-occupied single family residence being served by the septic tank.
5. All septage, wash water, and other liquids removed from the tank shall be removed and handled as septage by a DOH permitted disposal service and disposed of at an approved regulated wastewater treatment facility.
6. The Building Department shall inspect the tank once it is disconnected, emptied, cleaned, disinfected and filled with water. The inspection shall determine that:
   i. The tank has been disconnected from the drain field and the building sewer
   ii. The tank is full of water within 12 inches from the top of the tank
   iii. The clarity of the water is such that a Secchi disk is visible at the bottom of the tank
   iv. The pH of the water is between 6.0-8.0
   v. The free Chlorine residual of the water in the tank is >5.0ppm
   vi. The total coliform count <1000 per 100 ml
   vii. The fecal coliform count is <200 per 100 ml
   viii. No sanitary nuisance condition exists on the property related to the abandonment activities.
7. While one inspection is included in the abandonment permit fee, the applicant shall pay a re-inspection fee for any additional inspection visits necessary until all of the criteria in # 6 are met and final approval of the abandonment is granted by the County Building Department.
8. The applicant shall be responsible for all required laboratory fees. All sampling shall be conducted by County Building Department staff during the final inspection.
9. The abandonment permit shall be valid for 12 months. The septic tank shall be properly abandoned within 90 days after the connection to the sanitary sewer.
10. The tank shall not be connected to any irrigation components nor the water used for irrigation purposes until final approval of the abandonment has been granted by the County Building Department.
11. Upon final approval of the abandonment, use of the tank or the drain field for sewage storage, treatment or disposal is prohibited.
12. Upon final approval of the abandonment, the water collected in the tank shall be utilized for non-potable, irrigation purposes only.

19.07.030 - Toilet Facilities for Workers Required.

a. Suitable toilet facilities shall be provided and maintained in a sanitary condition for the use of workers during construction. Portable toilet facilities shall conform to ANSI Z4.3

b. The number of toilet facilities to be provided shall be in accordance with Table 19.07.030.b. It shall be the responsibility of each employer to provide toilet facilities sufficient for the number of his own employees.

TABLE 19.07.030.b.	
Number of Employees	Minimum Number of Toilet Facilities
1 – 10-	1
11 – 20	2
21 – 30	3
31 – 40	4
Over 40	1 additional facility for each 10 additional employees

c. It shall be the responsibility of the employer to ensure that all toilet facilities are maintained in a clean and sanitary condition. If toilet facilities are of the type that require a periodic servicing, it shall be the responsibility of the employer to provide sufficient toilet facilities and servicing to prevent the stated capacity of those facilities from being exceeded; the employer shall also assure ready access to the toilet facilities by the required servicing equipment.

d. Toilet facilities shall be located so as to be readily accessible to the employees for whom they are furnished.

19.07.040 - Minimum Water Supply for Single family Dwellings. All commercial buildings and dwellings shall be provided a potable water supply system as required by this section. Such system shall also satisfy all applicable requirements of the California Plumbing Code and the San Luis Obispo County Health Department.

a. **Community system or on site well**. Subject to the approval of the building official, a commercial building or dwelling may be supplied potable water from either:

1. A public water supply or domestic water system approved by the Health Department or operated by a state licensed water purveyor; or

2. An on-site well, water storage and delivery system in accordance with this section.

b. **On-site wells.** When an on-site well is the proposed potable water supply, a building permit may be issued only where the building site is located outside the service boundary of a community water system, and where the well, together with any on site water storage, satisfies all the following requirements:

1. **Health Department approval.** All water wells shall be designed constructed and shall obtain Health Department approval as required by Chapter 8.40 of this code.

2. **Minimum capacity – Residential:** A domestic well shall provide a minimum capacity of 5 gallons per minute (GPM) in order to be approved for use as a source of potable water for a single family dwelling. Use of a well with a minimum capacity of 2.5 gallons per minute may be approved by the building official where 1000 gallons of approved on site water storage is also provided. (Note: on site water storage for fire protection may also be required by the Land Use Ordinance

or, where applicable, the Coastal Zone Land Use Ordinance regardless of the requirements of this section.) A building permit may be issued where use of a well with less capacity than 2.5 gpm is proposed only where authorized by the director of environmental health.

3. **Minimum capacity – Commercial:** A domestic well for commercial use shall provide proof that the on-site wells will meet the demand requirements of the intended use. Unless an engineered design is submitted, each structure shall use Appendix Table K-3 to determine the gallons per day requirements. Outdoor areas used for events shall be sized the same as stores. Storage tanks shall be sized the same as septic tanks. If applicable, additional demand requirements for process water shall be submitted with the construction drawings by the engineer/architect of record (wine processing, industrial processing, etc).

4. **Testing of capacity.** The capacity required by subsection b(2 & 3) of this section for a residential or commercial domestic well shall be verified by a minimum four hour pump test with drawdown and recovery data by a licensed and bonded well driller or pump testing company. The pump test shall not be more than five years old.

5. **Potability.** All residential or commercial domestic water wells intended to provide potable water to residential or commercial buildings shall meet the requirements of the Health Department for potability.

6. **Testing for potability.** All new residential or commercial uses which use domestic water wells shall test the wells for potability as required by the Health Department. A report of the potability test shall be submitted and approved by the Health Department prior to granting temporary or permanent occupancy or final inspection approval of a project.

19.07.041 - Verification of Water Supply Required. No grading, building or plumbing permit application or plans for a project which will require new service with potable water shall be issued unless:

a. The building official is provided a written statement from the operator of a community or domestic water system that the purveyor will provide potable water service to the dwelling and that the water purveyor has sufficient water resource and system capacity to provide such service; or

b. The building official is provided evidence that a permit or other authorization has been granted by the water purveyor for the proposed project to connect to and use the community or domestic water system; or

c. An on site well is installed, tested, and is certified to satisfy the requirements of Section 19.07.040b, or the building official is provided evidence showing that potable water adequate to satisfy the standards of Section 19.07.040b is available on site. Evidence provided to prove availability of potable water shall include:

1. Existing county data; or

2. A report submitted by a registered hydrologist, geologist; or

3. Satisfactory evidence from a test well drilled on the parcel.

No final building inspection for a dwelling shall be approved until the dwelling is connected to an operating water supply approved pursuant to this section.

19.07.042 - Water Conservation Provisions. The requirements in this section shall apply to all new installations and, where specifically required, to existing structures.

a. Water fixtures. Water fixtures shall comply with current requirements of the California Energy Commission and Department of Water Resources.

b. Existing structures. In existing buildings, replacement water fixtures shall conform to the above requirements. In addition, all fixtures in an existing building shall be brought into conformance with these requirements when an alteration of that building meets either of the following criteria, except in the Nipomo Mesa Water Conservation Area and the Los Osos Groundwater Basin as described in Subsections d and e.

1. A bathroom is added;

2. The floor area is increased by twenty per cent (20%) or more.

c. Other requirements:

1. Spas, hot tubs, fountains and other decorative bodies of water shall be equipped with recirculating systems and shall be designed to operate without a continuous supply of water.

2. Vehicle wash facilities shall have approved water reclamation systems which provide for reuse of a minimum of 50 percent of the wash water. Hoses, pipes, and faucets for manual application of water to vehicles at such facilities shall be equipped with positive shut-off valves designed to interrupt the flow of water in the absence of operator applied pressure.

   Water supply piping shall be installed so that each dwelling unit may be served by a separate water meter.

d. Nipomo Mesa Water Conservation Area. : In addition to the requirements in sections a, b and c above, the requirements in paragraphs (1) through (6) below shall apply to all new development that uses water from the Nipomo Mesa Water Conservation Area shown in Figure 7-1.

1. The developer of any new structure that uses water from the Nipomo Mesa Water Conservation Area shall install plumbing fixtures that meet the following requirements:
   i. Toilets rated at no more than 1.28 gallons per flush (HET);
   ii. Showerheads rated at no more than 2.5 gallons per minute;
   iii Bathroom sink aerators with a volume of no more than 2.0 gallons per minute;

iv. Hot water circulation systems for master bathrooms and kitchens if the furthest plumbing fixture unit in these rooms is greater than twenty (20) pipe - feet from the hot water heater;
v. Commercial structures shall use waterless urinals;
vi. New residences shall have washing machines/laundry trays plumbed for grey-water systems pursuant to Chapter 16 of the Uniform Plumbing Code (Greywater Systems).

2. Any remodel of an existing structure or addition to an existing structure that uses water from the Nipomo Mesa Water Conservation Area, that requires a construction permit pursuant to this Title, that is valued at $20,000 or more as determined by the Building Division of the Department of Planning and Building, and that is not solely for roof replacement or electrical work to bring the structure into compliance with this Title, shall require the replacement of plumbing fixtures in the entire structure with the following types of plumbing fixtures:
   i. Toilets rated at no more than 1.28 gallons per flush (HET);
   ii. Showerheads rated at no more than 2.5 gallons per minute;
   iii. Bathroom sink aerators with a volume of no more than 2.0 gallons per minute;
   iv. All urinals in commercial structures shall be replaced with waterless urinals.

   Toilets rated at no more than 1.6 gallons per flush are exempt from this requirement and do not have to be replaced.

3. Prior to issuance of a construction permit for a new structure with plumbing fixtures that use water from the Nipomo Mesa Water Conservation Area, the developer of such new structure shall provide evidence to the Department of Planning and Building that the plumbing fixtures in five (5) existing structures within the Nipomo Mesa Water Conservation Area with toilets rated at 3.5 or more gallons per flush have been retrofitted by replacing all toilets, showerheads and faucet aerators as follows:
   i. Toilets rated at no more than 1.28 gallons per flush (HET);
   ii. Showerheads rated at no more than 2.5 gallons per minute;
   iii. Bathroom sink aerators with a volume of no more than 2.0 gallons per minute;
   iv. All urinals in commercial structures shall be replaced with waterless urinals.
   v. Owners of existing structures that are retrofitted under this program shall agree to allow their water purveyors to release water use data to the Department of Planning and Building in order to gauge the effectiveness of the program to the extent allowed by California law.

   Upon retrofitting of the required number of plumbing fixtures, the developer shall submit evidence of the completed retrofits to the Department of Planning and Building. This evidence shall consist of a Retrofit Verification Declaration completed and executed by a licensed plumber and/or contractor.

   Upon submittal to the Department of Planning and Building of a completed and executed Retrofit Verification Declaration accompanied by the required fee, the developer shall be issued a Water Conservation Certificate from the Department

of Planning and Building. Once the Water Conservation Certificate is issued, a construction permit may be issued.

4. In lieu of retrofitting plumbing fixtures in existing structures as specified in subsection d.3., a developer of a new structure may instead pay to the Nipomo Community Services District (hereinafter referred to as the "District") the amount of $750.00 per toilet to be installed in the new structure. Prior to issuance of a building permit for the new structure specified in subsection d.3., a receipt for the payment to the District shall be submitted to the Department of Planning and Building.

5. The District shall use the in lieu fees specified in subsection d.4. for programs that result in measurable water conservation in the Nipomo Mesa Water Conservation Area, including but not limited to the following:
   i. Subsidize toilet/showerhead retrofits.
   ii. Subsidize interior water audits.
   iii. Subsidize exterior water audits.
   iv. Subsidize irrigation system changes that will save water pursuant to the results of a District-sponsored water audit.
   v. Subsidize removal of high water-using turf and landscape materials and replacement with low water-using landscape material.
   vi. Provide repairs to irrigation systems at a cost not to exceed $100.00 per parcel.

   Fees collected from new development located within the District boundaries shall only be used for water conservation projects within the District. Fees collected from new development that is located outside of the District boundaries shall be used for water conservation projects outside of the District boundaries.

6. As an alternative to Subsection d.4., a developer or developers may choose to fund a water conservation program for public parks, school grounds or other public facilities in the Nipomo Mesa Water Conservation Area. The program to be funded will have been prepared by a California-licensed landscape architect for either the County Parks Department, the Lucia Mar School District or another public entity**,** as applicable. The program shall be reviewed and approved by the Planning Director and the owner of the public facility, and shall identify water savings and associated costs of conservation measures such as irrigation system replacement and/or repairs, installation of "smart controllers," removal of turf, replacement of high water using landscape material and amendments to soils. The water conservation program shall clearly identify the expected water savings from implementation of the program. Each contribution of $1,500 to the applicable public entity for the water conservation program will satisfy the requirement to retrofit plumbing fixtures in **five (5)** existing structures prior to issuance of a construction permit for each new structure, in accordance with subsection d.3.

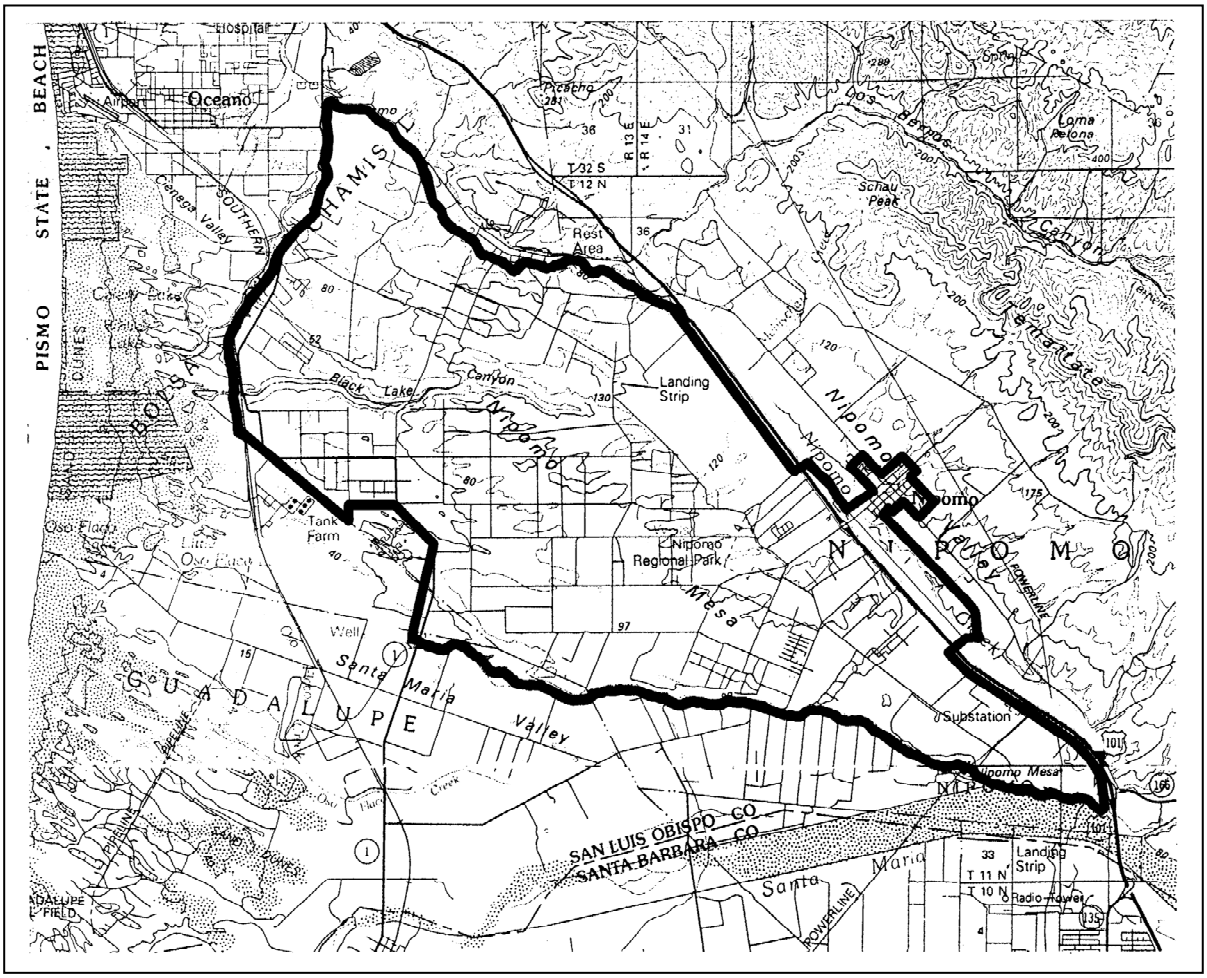

Figure 7-1 – Nipomo Mesa Water Conservation Area

]

e. Los Osos Groundwater Basin: In addition to the requirements in sections a, b and c above, the requirements in paragraphs 1 through 9 below shall apply to all new development that uses water from the Los Osos Groundwater Basin shown in Figure 7-2.

1. The developer of any new structure that uses water from the Los Osos Groundwater Basin shall install plumbing fixtures that meet the following requirements:
   - i. Toilets rated at no more than 1.28 gallons per flush (HET);
   - ii. Showerheads rated at no more than 2.5 gallons per minute;
   - iii. Bathroom sink aerators with a volume of no more than 1.0 gallons per minute;
   - iv. Hot water circulation systems for master bathrooms and kitchens if the furthest plumbing fixture unit in these rooms is greater than twenty (20) pipe - feet from the hot water heater;
   - v. Commercial structures shall use waterless urinals;
   - vi. New residences shall be plumbed for grey-water systems pursuant to Chapter 16 of the Uniform Plumbing Code.

2. Prior to issuance of a construction permit for a new structure with plumbing fixtures that uses water from the Los Osos Groundwater Basin, the developer of such new structure

shall retrofit plumbing fixtures in existing structures within the Los Osos Groundwater Basin. The number and type of plumbing fixtures to be installed shall be as required in the equivalency table as adopted and codified in Appendix A. The equivalency table indicates the point values of existing fixtures which may be retrofitted and the corresponding point requirements for each newly constructed or remodeled structure. A package of proposed retrofits and water conservation requirements must add up to no less than the minimum requirements established in Appendix C.

3. Any addition of 120 square feet or more to an existing structure that uses water from the Los Osos Groundwater Basin shall require the replacement of plumbing fixtures in the entire structure with the following types of plumbing fixtures:
   i. Toilets rated at no more than 1.28 gallons per flush (HET);
   ii. Showerheads rated at no more than 2.5 gallons per minute;
   iii. Bathroom sink aerators with a volume of no more than 1.0 gallons per minute;
   iv. All urinals in commercial structures shall be replaced with waterless urinals.

4. Any remodel of an existing structure that uses water from the Los Osos Groundwater Basin that requires a construction permit pursuant to this Title, and that includes replacement of plumbing fixtures in the kitchen or any bathroom, shall require the replacement of plumbing fixtures in the entire structure with the following types of plumbing fixtures:
   i. Toilets rated at no more than 1.28 gallons per flush (HET);
   ii. Showerheads rated at no more than 2.5 gallons per minute;
   iii. Bathroom sink aerators with a volume of no more than 1.0 gallons per minute;
   iv. All urinals in commercial structures shall be replaced with waterless urinals.

5. The Planning Director (or designee) is authorized to make determinations for fixtures or projects not specifically designated in the equivalency table in Appendix C.

6. The equivalency table in Appendix C may be amended by the Planning Director from time to time to reflect changes in water use and/or water savings.

7. Owners of existing structures that are retrofitted under this program shall agree to allow their water purveyors to release water use figures to the Department of Planning and Building in order to gauge the effectiveness of the program to the extent allowed by California Law.

8. Upon retrofitting of the required number of fixtures, the developer shall submit evidence of the completed retrofits to the Department of Planning and Building. This evidence shall consist of a Retrofit Verification Declaration completed and executed by a licensed plumber and/or contractor. The Retrofit Verification Declaration shall be used for development of a specific property or properties and shall not be transferred to another parcel.

9. Upon submittal to the San Luis Obispo County Department of Planning and Building of a completed and executed Retrofit Verification Declaration accompanied by the required fee, the developer shall be issued a Water Conservation Certificate from the Department of Planning and Building. Once the Water Conservation Certificate is issued, the new structure may receive final occupancy approval.

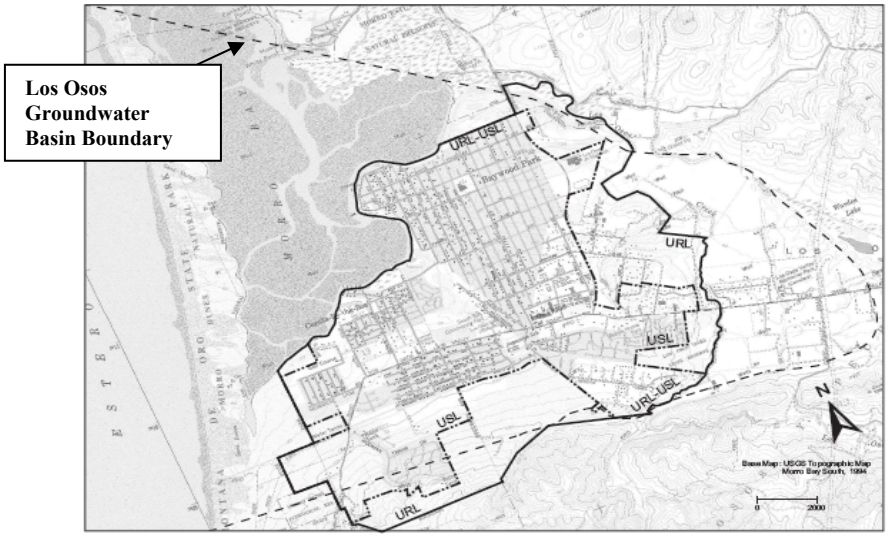

Figure 7-2 – Los Osos Groundwater Basin (not to scale)

19.08.010 - Purpose. The purpose of this Chapter is to enhance the long-term public health, welfare, and improve the environmental and economic health of the County. The provisions referenced in this Chapter are designed to achieve the following objectives in support of the stated purpose:

1. Increase energy efficiency in buildings;
2. Encourage water and resource conservation;
3. Reduce waste generated by construction projects;
4. Reduce long-term building operation and maintenance costs;
5. Improve indoor air quality and occupant health; and
6. Contribute to meeting the state and local commitments to reduce greenhouse gas production and emissions

19.08.020 - Definitions. The following definitions shall apply to this chapter:

a. "Covered project" means a development project for which one or more building permits are required for new construction, additions, alterations or repairs to any residential or non residential structure as set forth by the standards for Scope and Applicability outlined in Section 19.01.020

b. "Green building" means a whole systems approach to the design, construction, and operation of buildings that substantially mitigates the environmental impacts of buildings. Green building practices recognize the relationship between natural and built environments and seek to minimize the use of energy, water and other natural resources and provide a healthy, productive indoor environment.

c. "BIG" or "Build It Green", a non-profit organization which established and maintains the Green Point Rated system for evaluating and certifying residential green buildings and green building professionals.

d. "BPI" means the Building Performance Institute, a non-profit organization which provides training and certification of green building professionals.

e. "GBCI" means the "Green Building Certification Institute", a non-profit organization which certifies green buildings and green building professionals under the LEED rating system.

f. "Green building checklist" means a checklist or rating sheet used for calculating a green building rating.

g. "Green building rating system" means a standardized rating system providing specific criteria to determine the level of compliance of building projects as set forth by the Standards for Compliance outlined in 19.04.140.

h. "GreenPoint Rated" means a residential building certified as complying with the green building rating systems developed by the Build It Green organization.

i. "GreenPoint Rater" means an individual certified by Build It Green as capable of evaluating and rating residential construction projects for compliance with the GreenPoint Rated green building rating systems.

j. "HERS" means the Home Energy Rating System adopted by the California Energy Commission.

k. "LEED®" means the "Leadership in Energy and Environmental Design" green building rating system developed by the US Green Building Council.

l. "New construction" means the construction of a new or replacement residential dwelling unit or a new or expanded commercial building.

m. "USGBC" means the US Green Building Council, a non-profit organization which established and maintains the LEED® rating systems for evaluating and certifying green buildings and green building professionals.

19.08.030 - Applicability. The provisions of this Chapter shall apply to all construction or development projects defined as a "Covered Project" effective January 1, 2014.

19.08.040 – Residential Standards. The following standards apply to all residential construction in addition to the minimum Cal Green requirements:

a. **Home energy rating.** All new construction roof sheathing replacements and additions shall use radiant barriers on roof sheathing.

b. All new work for alterations or additions shall comply with the current minimum Cal Green standards as they are applied to all new construction.

c. **Home energy rating:**

1. Alterations or additions with a construction value over $10,000.00 shall have a Home Energy Rating or BPI Energy Audit at construction completion, and the initial energy audit shall be completed prior to permit issuance

2. A copy of the Home Energy Ratings/ Energy Audit will be given to the Building Division and filed prior to final inspection for public access.

3. Rating shall be completed by a certified HERS rater, certified BPI Energy or as determined by the jurisdiction. The rating shall be valid for 5 years.

d. New homes 2,500 SF or less, shall submit a green building checklist to include on the building plans one of the following (no additional third party inspection is required for section 19.08.040 C, verification of these requirements shall be completed by the County Planning and Building Department):

1. **Green Point Rated, achieving a minimum of 75 points.** The project shall include the program's prerequisites *except* in regards to energy efficiency; the project is not required to exceed current Title 24 Part 6 energy requirements as a part of this checklist.

2. **LEED for Homes achieving a minimum of 40 Points.** The project shall include the program's prerequisites *except* in regards to energy efficiency; the project is not required to exceed current Title 24 Part 6 energy requirements as a part of this checklist.

3. **CAL Green Tier 1.** The project shall include the program's prerequisites *except* in regards to energy efficiency; the project is not required to exceed current Title 24 Part 6 energy requirements as a part of this checklist.

e. New homes greater than 2,500 SF shall provide third party verification. Verification shall include one of the following,

1. Green Point Rated with 75 points minimum; or

2. LEED for Homes "Certified".

The project shall include the above program's prerequisites *except* in regards to energy efficiency; the project is not required to exceed current Title 24 Part 6 energy requirements as a part of the above checklists. Exceeding current Title 24 Part 6 energy requirements is voluntary and not a requirement of this code.

An approved third party verifier shall be noted on the plans prior to permit issuance.

f. **Indoor Water:** For alterations or additions with a valuation over $10,000.00: Any existing fixtures that exceed the thresholds in the water use baseline table below shall be brought up to CAL Green mandatory requirements:

Fixture Type	Maximum Flow Rate
Showerheads	2.5 gpm @ 80 psi
Lavatory faucets nonresidential	0.5 gpm @ 60 psi
Lavatory faucets residential	2.2 gpm @ 60 psi
Kitchen faucets	2.2 gpm @ 60 psi
Water Closets	1.6 gallons/flush
Urinals	1.0 gallons/flush

g. **Hot Water Recirculating Systems:** For new construction or when alterations or additions exceed 50% of habitable space, an on-demand recirculating system shall be installed.

h. **Outdoor Fireplaces and Space Heaters connected to natural gas, propane or electricity.** All outdoor non-renewable sources of heat shall be on mechanical timers with a maximum of 4 hours' time limit. Exception: Portable propane heaters with tanks 5 gallons or less.

i. **Outdoor Water:** New Construction shall comply with CAL Green Tier 1 for outdoor water requirements.

j. **Renewable Energy:**

1. **New Construction**: Plans shall identify a conduit system from the main electrical panel to an accessible location. Location may be either attic space, roof structure, or an area onsite designated for future renewable energy generation to accommodate a point of connection on the load side of the electrical service disconnecting means. The conduit system shall be sized per Table 19.08.040(H)(1). The County recognizes there are multiple service configurations and options currently available. Service options not listed in Table 19.08.040(H)(1) shall default to CEC Article 690 and 705 requirements, where conduit shall be sized to accommodate a branch circuit sized at 20% of the rating of the busbar. Renewable energy connections installed on the supply of the service disconnecting means are permitted as allowed per the CEC, however, shall meet all local Utility requirements, in addition, shall maintain the gear's product listing (i.e. UL or equivalent listing agency).

Table 19.08.040(H)(1)
Minimum Conduit Size Requirements for a Future Renewable energy System

Service Rating	Renewable Capacity	Conduit Size Required
100A	20 Amps @ 120 Volts	(1) 3/4” Conduit
120A	24 Amps @ 120 Volts	(1) 3/4” Conduit
150A	30 Amps @ 120 Volts	(1) 3/4” Conduit
200A	40 Amps @ 120 Volts	(1) 1” Conduit
400A	80 Amps @ 120 Volts	(1) 1-1/4” Conduit

19.08.050 – Non Residential Standards. The following standards apply to all non-residential construction in addition to the minimum Cal Green requirements:

a. **New Construction:** Non-residential projects with a construction value greater than $10,000.00 shall submit a green building checklist to include on the building plans one of the following (no additional third party inspection is required for section 19.08.050 B, verification of these requirements shall be completed by the County Planning and Building Department):

1. LEED checklist with a minimum of 40 Points. The project is not required to exceed current Title 24 Part 6 energy requirements as a part of this checklist.

2. CAL Green checklist showing a minimum compliance with Tier 1. The project is not required to exceed current Title 24 Part 6 energy requirements as a part of this checklist.

b. **New Construction:** Non-residential projects with a construction value of $1,000,000, or a project greater than 10,000 square feet (whichever is less):

1. Projects shall be LEED Certified or comply with CAL Green Tier 1; the project is not required to exceed current Title 24 Part 6 energy requirements as a part of this checklist.

2. Project registration or equivalent required at permit issuance; evidence of certification shall be required within 1 year of Certificate of Occupancy.

3. At least 3% of the required parking spaces (but no less than one space) shall include electric vehicle infrastructure. The project shall provide facilities meeting Section 406.7 (Electric Vehicle) of the California Building Code and for each space, provide panel capacity and dedicated conduit for one 208/240V 40 amp circuit terminating within 5 feet of the midline of each parking space. The Chief Building Official can approve a different amperage device if the applicant can demonstrate the adequacy for the different amperage.

c. Indoor Water: For alterations or additions with a valuation over $10,000: Any existing fixtures that exceed the thresholds in the water use baseline table below shall be brought up to CAL Green mandatory requirements:

Fixture Type	Maximum Flow Rate
Showerheads	2.5 gpm @ 80 psi
Lavatory faucets nonresidential	0.5 gpm @ 60 psi
Lavatory faucets residential	2.2 gpm @ 60 psi
Kitchen faucets	2.2 gpm @ 60 psi
Water Closets	1.6 gallons/flush
Urinals	1.0 gallons/flush

d. Outdoor Water: New Construction shall comply with CAL Green Tier 1 for outdoor water requirements.

e. Outdoor Fireplaces and Space Heaters connected to natural gas, propane or electricity. All outdoor non-renewable sources of heat shall be on mechanical timers with a maximum of 4 hours' time limit. Exception: Portable propane heaters with tanks 5 gallons or less.

f. Renewable Energy:

New Construction: Construction documents shall include a renewable energy system basis of design which identifies a kilo-watt (KW) system rating. The plans shall identify a conduit system from the main electrical panel to an accessible location (either attic space, roof structure, or an area onsite designated for future renewable energy generation). The single line diagram shall identify how the renewable energy system output is interconnected to the electrical distribution system pursuant to CEC Article 690 and 705 requirements.

19.08.060 – Additional Requirements. The following standards apply to all non-residential construction in addition to the minimum Cal Green requirements:

a. Waste recycling:

1. All new construction, alterations and additions, demolitions, including county projects, shall be required to divert at least 70%, with a goal to increase diversion to 75% (as local recycling facilities are available), for all project construction and demolition debris.

2. Applicants shall complete and submit a waste management recycling plan at construction permit application submittal. The applicant shall include:

   A. The project owner, project location, and project contractor;
   B. The total size (square footage) of the demolition and/or construction portions of the project, including any asphalt or concrete work
   C. The estimated volume or weight of project construction and demolition debris, by materials type, to be generated, using standard generation rates provided by the Chief Building Official;
   D. The maximum volume or weight of such materials that can feasibly be diverted via reuse or recycling;
   E. The vendor or facility that the applicant/contractor proposes to use to collect or receive that material; and
   F. The estimated volume or weight of construction and demolition debris that will be landfilled.

3. Prior to receiving final inspection or notice of completion for the project the applicant/contractor shall submit a Recycling and Disposal Report which documents that the diversion requirement for the project has been met. The diversion requirement is satisfied if the applicant/contractor has diverted at least 70% of the total construction and demolition debris generated by the project via reuse or recycling, unless an exemption has been granted pursuant to Section 19.08.090 of this chapter, in which case the diversion requirement shall be the maximum feasible diversion rate established by the Department of Planning and Building. The disposal report documentation shall include all of the following:

   A. All receipts from the vendor or facility which collected or received each material showing the actual weight or volume of that material;

   B. Any photographs that document the reuse of materials on site;

   C. A completed Disposal Report section showing the actual volume or weight of each material diverted and landfilled;

   D. Any additional information the applicant/contractor believes is relevant to determining its efforts to comply in good faith with this chapter.

4. Applicants or contractors shall make reasonable efforts to ensure that all construction and demolition debris diverted or landfilled are measured and recorded using the most accurate method of measurement available. To the extent practical, all construction and demolition debris shall be measured by weight on scales. Such scales shall be in compliance with all regulatory requirements for accuracy and maintenance. For construction and demolition debris for which weighing is not practical due to small size or other considerations, a volumetric measurement shall be used. For conversion of volumetric measurements to weight, the applicant/contractor shall use the standardized conversion rates approved by the Chief Building Official for this purpose.

b. Incentives:

1. **Residential:** The cost of plan review by the County Plans Examiner (i.e. Building Plan Review Fee) shall be reduced by $500.00 for all projects completing a third party verified rating system such as LEED, Green Point Rated .

2. **Non Residential:** The cost of plan review and by the County Plans Examiner (i.e. Building Plan Review Fee) shall be reduced by $500.00 for all projects under 5,000 square feet, $1,000.00 for all projects 5,000 – 10,000 square feet, and $2,000.00 for all projects over 10,000 square feet when completing a third party verified rating system such as LEED, Green Point Rated.

c. Off Grid Stand Alone Power Supply Requirements: Generators alone are not allowed to provide power to structures not connecting to the power grid. Photovoltaic systems with battery backup and generators shall be provided and sized to provide power for the calculated loads. The photovoltaic systems shall be sized to handle 100% of calculated loads.

19.08.070 – Administrative Procedures. The procedures for compliance with the provisions of this Chapter shall include, but not be limited to, the following:

a. Planning applications: If a discretionary land use permit is required for a Covered Project, applicants should be prepared to identify expected green building measures to be included in the project to achieve the compliance thresholds. Applicants should identify any anticipated difficulties in achieving compliance and any exemptions from the requirements of this Chapter that may be requested. If project is over 10,000 sq. ft. and commissioning is required, then the Owner Project Requirements(OPR) shall be submitted prior to the land use permit approval.

b. Building plan check review: Upon submittal of an application for a building permit, building plans for any Covered Project shall include a green building program description and completed checklist. The checklist shall be incorporated onto a separate full-sized plan sheet included with the building plans. An approved third party verifier shall be noted on the plans prior to permit issuance if applicable.

c. Changes during construction: During the construction process, alternate green building measures may be substituted, provided that the qualified professional provides documentation of the proposed change and the project's continued ability to achieve the Standards for Compliance to the Chief Building Official.

d. Final building inspection: Prior to final building inspection and occupancy for any Covered Project, a qualified professional shall provide evidence that project construction has achieved the required compliance set forth in the Standards for Compliance outlined in Section 19.04.140. Where subsequent certification of the building is required by the Standards for Compliance, the Chief Building Official shall also determine whether the applicant has demonstrated that such certification is in process and will be achieved not later than one year after approval of final building inspection. If the Chief Building Official determines that the applicant has met these requirements, the final building inspection may proceed.

e. Post final inspection requirement: Where certification of the building is required by the Standards for Compliance, and such certification is only available subsequent to occupancy of the completed building, the applicant shall provide documentation of such certification within one year of the date of the building final. Failure to provide evidence of this certification within this timeframe, or within an alternate timeframe as determined by the Chief Building Official, will result in a determination that the Covered Project is not in compliance with the requirements of this Chapter.

f. Conflict with other laws: The provisions of this Chapter are intended to be in addition to and not in conflict with other laws, regulations and ordinances relating to building construction and site development. If any provision of this Chapter conflicts with any duly adopted and valid statutes or

regulations of the federal government of the State of California, the federal or state statutes or regulations shall take precedence.

19.08.080 – Appeals. Any aggrieved applicant or person may appeal the determination of the Chief Building Official regarding the granting or denial of an exemption or compliance with any other provision of this Chapter. An appeal of a determination of the Chief Building Official shall be filed in writing and processed in accordance with the provisions of Section 19.01.140 of this title.

19.08.090 – Exemptions.

a. The provisions of this Chapter shall not apply to:

1. Buildings which are temporary (such as construction trailers).

2. Building area which is not or is not intended to be conditioned space.

3. Any requirements of this Chapter which would impair the historic integrity of any building listed on a local, state or federal register of historic structures, as determined by the Chief Building Official. In making such a determination, the Chief Building Official may require the submittal of an evaluation by an architectural historian or similar expert.

4. Improvements and project valuation related to seismic or disabled access, building replacement due to catastrophic loss due to fire, flood or earthquake damage or installation of renewable energy systems

b. Hardship or Infeasibility Exemption: If an applicant for a Covered Project believes that circumstances exist that make it a hardship or infeasible to meet the requirements of this Chapter, the applicant may request an exemption as set forth below. In applying for an exemption, the burden is on the applicant to show hardship or infeasibility.

1. Application: The applicant shall identify in writing the specific requirements of the Standards for Compliance that the project is unable to achieve and the circumstances that make it a hardship or infeasible for the project to comply with this Chapter. Circumstances that constitute hardship or infeasibility shall include, but are not limited to, the following:

A. There is a conflict between the provisions of the applicable green building rating system and the California Building Standards Code, other State code provisions, other requirements of this Title or conditions imposed on the project through a previously approved planning application;

B. There is a lack of commercially available green building materials and technologies to comply with the green building rating system;

C. That the cost of achieving compliance is disproportionate to the overall cost of the project;

D. That physical conditions of the project site make it impractical to incorporate necessary green building measures or achieve the Standards for Compliance;

E. That compliance with certain requirements would impair the historic integrity of buildings listed on a local, state or federal list or register of historic structures;

2. **Granting of exemption:** If the Chief Building Official determines that it is a hardship or infeasible for the applicant to fully meet the requirements of this Chapter, the Chief Building Official shall determine the maximum feasible threshold of compliance reasonably achievable for the project. In making this determination, the Chief Building Official shall consider whether alternate, practical means of achieving the objectives of this Chapter can be satisfied, such as reducing comparable energy use at an offsite location within the County. If an exemption is granted, the applicant shall be required to comply with this chapter in all other respects and shall be required to achieve the threshold of compliance determined to be achievable by the Chief Building Official.

3. **Denial of exception:** If the Chief Building Official determines that it is reasonably possible for the applicant to fully meet the requirements of this Chapter, the request shall be denied and the applicant shall be notified of the decision in writing. The project and compliance documentation shall be modified to comply with the Standards for Compliance.

19.90.010 - Strengthening Provisions Adopted. The California Existing Building Code as adopted in 19.01.040 of this code and amended in 19.04.010 of this code shall be the strengthening standards for buildings subject to this chapter.

19.90.020 - Seismic Zone. Each site shall be assigned to a minimum Seimic Design Category(SDC) D except as provided for in this section. The Administrative Authority may reassign a site to an alternate seismic zone for either of the following reasons:

a. Where a building under County jurisdiction is located within an area that has been designated by an incorporated city to be in a SDC other than D.

b. Where a detailed analysis by a registered engineering geologist or other qualified professional determines that the site or geographic area encompassing the site is in a seismic zone other than SDC D.

c. Where the SDG is determined to be greater per CBC

The details of the findings used in reassigning a site to an alternate seismic zone shall be recorded and entered into the files of the Administrative Authority.

19.90.030 - Administrative Provisions. See CBC. Chapter 1, administrative provisions for definitions and rating classification of buildings. A building may be placed in a higher rating classification if it is determined by the building official to pose a hazard to an adjacent structure or a public way.

a. Compliance Requirements.

1. The owner of each building within the scope of this Chapter shall, upon service of an order and within the time limits set forth in this Chapter, cause a structural analysis to be made of the building by an engineer or architect licensed by the state to practice as such and, if the building does not comply with earthquake standards specified in this section, the owner shall cause it to be structurally altered to conform to such standards or shall cause the building to be demolished.

2. The owner of a building within the scope of this Chapter shall comply with the requirements set forth above by submitting to the building official for review within the stated time limits:

i. Within 270 days after service of the order, a structural analysis, which is subject to approval by the building official, and which shall demonstrate that the building meets the minimum requirements of this Chapter; or

ii. Within 270 days after service of the order, the structural analysis and plans for structural alterations of the building to comply with this Chapter; or

iii. Within 120 days after service of the order, plans for the installation of wall anchors in accordance with the requirements specified in applicable sections of Chapter 16 of the .C.B.C.; or

iv. Within 270 days after service of the order, plans for the demolition of the building.

3. After plans are submitted and approved by the building official, the owner shall obtain a building permit and then commence and complete the required construction or demolition within the time limits set forth in Table No. 9B. These time limits shall begin to run from the date the order is served in accordance with Section 19.90.030 (c)2, except that the time limit to commence and complete structural alteration or demolition shall begin to run from the date the building permit is issued.

4. Owners electing to comply with Item 2(iii) of this subsection are also required to comply with Items 2(ii) or 2(iv) of this subsection provided, however, that the 270-day period provided for in Item 2(ii) or 2(iv) and the time limits for obtaining a building permit and to complete structural alterations or building demolition set forth in Table No. 9B shall be extended in accordance with Table No. 9A. Each such extended time limit shall begin to run from the date the order is served in accordance with Section 19.90.030 (c), except that the time limit to commence structural alterations or demolition shall begin to run from the date the building permit is issued.

b. Historical Buildings. Alterations or repairs to qualified historical buildings, as defined by Section 18955 of the Health and Safety Code of the State of California and as regulated by Sections 18950 to 18961 of that Code, as designated on official national, state, or local registers or inventories shall comply with the State Historical Building Code (California Code of Regulations Title 24, Building Standards, Part 8), in addition to this chapter.

c. Administration.

1. Order - Service.

i. The building official shall, in accordance with the priorities set forth in Table No. 9A, issue an order as provided in this section to the owner of each building within the scope of this Chapter.

ii. Prior to the service of an order as set forth in Table No. 9A, a bulletin may be issued to the owner as shown upon last equalized assessment roll or to the person in apparent charge or control of a building considered by the building official to be within the scope of this Chapter. The bulletin may contain information the building official deems appropriate. The bulletin may be issued by mail or in person.

2. **Order - Priority of Service**. Priorities for the service of the order for buildings within the scope of this Chapter shall be in accordance with the rating classification as shown on Table No. 9A. Within each separate rating classification, the priority of the order shall normally be based upon the occupant load of the building. The owners of the buildings housing the largest occupant loads shall be served first. The minimum time period prior to the service of the order as shown on Table No. 9A shall be measured from the effective date of this Chapter. The building official may, upon receipt of a written request from the owner, order such owner to bring his building into compliance with this Chapter prior to the normal service date for such building set forth in this Chapter.

3. **Order - Contents.** The order shall be in writing and shall be served either personally or by certified or registered mail upon the owner as shown on the last equalized assessment roll, and upon the person, if any, in apparent charge or control of the building. The order shall specify that the building has been determined by the building official to be within the scope of this Chapter and, therefore, is required to meet the minimum seismic standards of this Chapter. The order shall specify the rating classification of the building and shall be accompanied by a copy of Section 19.90.030 (a), which sets forth the owner's alternatives and time limits for compliance.

4. **Appeal from Order.** The owner of the building may appeal the building official's initial determination that the building is within the scope of this Chapter to the Board of Construction Appeals established by Section 19.01.130 of this Title. Such appeal shall be filed with the Board within 60 days from the service date of the order described in Section 19.90.030 (c)3. Any such appeal shall be decided by the Board no later than 90 days after filing and the grounds thereof shall be stated clearly and concisely. Appeals or requests for modifications from any other determinations, orders or actions by the building official pursuant to this Chapter shall be made in accordance with the procedures established in Section 113 of the CBC

5. **Recordation.** The building official shall, within 30 days of the effective date of this Chapter, file with the office of the county recorder a certificate stating that the subject building is within the scope of this Chapter and is a potentially earthquake hazardous building. The certificate shall also state that the owner thereof has been notified of the requirements contained within this Chapter.

   If the building is either demolished, found not to be within the scope of this Chapter, or is structurally capable of resisting minimum seismic forces required by this Chapter as a result of structural alterations or an analysis, the building official shall file with the office of the county recorder a form terminating the status of the subject building as being classified within the scope of this Chapter.

6. **Enforcement.** If the owner in charge or control of the subject building fails to comply with any order issued by the building official pursuant to this Chapter within any of the time limits set forth in Section 19.90.030 (a), the building official shall verify that the record owner of this building has been properly served. If the order has been served on the record owner, then the building official shall order that the entire building be vacated and that the building remain vacated until such order has been complied with. If compliance with such order has not been accomplished within 90 days after the date the building has been ordered vacated or such additional time as may have been granted by the Board of Appeals, the building official may order its demolition in accordance with the provisions of Section 116 of the CBC.

TABLE No. 9A
EXTENSIONS OF TIME AND SERVICE PRIORITIES

Rating Classification	Occupant Load	Extension of Time if Wall Anchors Are Installed	Periods for Service of Order
(Highest Priority) I	1 or more	N/A	N/A
II	100 or more	1 years	2½ years
III-A	100 or more	1 years	3 years
III-B	More than 50 Less than 100	1 years	4 years
III-C	More than 19 Less than 51	1 years	5 years
IV (Lowest Priority)	Less than 20	1 years	6 years

TABLE NO. 9B
TIME LIMITS FOR COMPLIANCE

Required Action by Owner	Obtain Building Permit Within	Commence Construction Within	Complete Construction Within
Structural Alteration or Building Demolition	1 year [2]	180 days [1]	3 years [2]
Wall Anchors	180 days [2]	270 days [2]	1 year [2]

Notes: [1] Measured from date of building permit issuance.
[2] Measured from date of service of order.

SECTION 2: The Board of Supervisors has considered the amendments to Title 19 that are proposed with respect to the matter described above. The Board of Supervisors has, as a result of its consideration, the evidence presented at the hearings on said matter, and all comments that were received during the public hearing process, determined that this activity is exempt from review pursuant to CEQA Guidelines Section 15061(b)(3) which provides that an activity is not subject to CEQA review where it can be seen with certainty that there is no possibility that it may have a "significant effect on the environment." The Board of Supervisors finds that it can be seen with certainty that there is no possibility that the adoption of the amendments to Title 19 as stated above may have a significant effect on the environment because there is no substantial evidence that the adoption of this ordinance will have a significant effect on the environment. The Board of Supervisors hereby approves this adoption of the above amendments to Title 19 in accordance with the California Environmental Quality Act and the County's regulations implementing said Act.

SECTION 3: If any section, subsection, clause, phrase or portion of this ordinance is for any reason held to be invalid or unconstitutional by the decision of a court of competent jurisdiction, such decision shall not affect the validity or constitutionality of the remaining portion of this ordinance. The Board of Supervisors hereby declares that it would have passed this ordinance and each section, subsection, clause, phrase or portion thereof irrespective of the fact that any one or more sections, subsections, sentences, clauses, phrases or portions be declared invalid or unconstitutional.

SECTION 4: The building official is hereby authorized and directed to transmit a copy of this ordinance to the California Building Standards Commission as required by California Health and Safety Code Section 17958.7.

SECTION 5: This ordinance shall take effect and be in full force and effect thirty (30) days after its passage and before the expiration of fifteen (15) days after passage of this ordinance, it shall be published once with the names of the members of the Board of Supervisors voting for and against the ordinance in a newspaper of general circulation published in the County of San Luis Obispo, State of California.

PASSED AND ADOPTED by the Board of Supervisors of the County of San Luis Obispo, State of California on this _____day of _____, 2013, by the following roll call vote, to wit:

AYES: Supervisors

NOES:

ABSENT:

ABSTAINING:

_____
Chairperson of the Board of Supervisors of the County of San Luis Obispo, State of California

ATTEST:

_____
County Clerk and Ex-Officio Clerk of the Board of Supervisors,
County of San Luis Obispo, State of California

[SEAL]

ORDINANCE CODE PROVISIONS
APPROVED AS TO FORM AND CODIFICATION:

RITA L. NEAL
County Counsel

By: _____
NINA NEGRANTI
Chief Deputy County Counsel

Dated: November 14, 2013